$$DW = 2 \cdot \sqrt{a_p (D_c - a_p)}$$

(kW) (m/min) (kW)

$$f \leq 2\sqrt{a_p (2RE - a_p)} \geq 2RE$$

$$n = \frac{V_c \cdot 1000}{\pi \cdot D_c}$$

$$V_f = n \cdot ZEFP \cdot f_z$$

$$\frac{\Omega}{d_v \cdot q \cdot \lambda} = d$$

(m/min)

$$R_a = \frac{f^2 \cdot 50}{RE}$$

(m/min)

$$Q = V_c \cdot f \cdot a_p$$

(cm3/min) (cm³/min)

(:m)

procarb

CUTTING TOOLS

Products

$$V_c = \frac{n \cdot \pi \cdot D_c}{1000}$$

(cm3/min) (kW)

$$\left(\frac{\frac{f}{2RE}}{\arcsin\left(\frac{f}{2RE}\right)} \right) \cdot RE(\mu m)$$

(rev/min)

$$R_a \times 770 \cdot 1 -$$

$$R_a = \frac{R_t}{3,5}$$

(mm/rev)

$$V_f = n \cdot ZEFP \cdot f_z$$

(rev/min)

$$Q = V_c \cdot f \cdot a_p$$

$$R_t = k \cdot \frac{f^2 \cdot 1000}{8 \cdot RE}$$

(rev/min)

$$R_a = \frac{f^2 \cdot 50}{RE}$$

(cm3/min)

$$V_c = \frac{n \cdot \pi \cdot D_c}{1000}$$

(mm/rev)

$$Q = V_c \cdot f \cdot a_p$$

$$n = \frac{V_f}{ZEFP \cdot f_z}$$

$$R_t = k \cdot \frac{f^2 \cdot 1000}{8 \cdot RE}$$

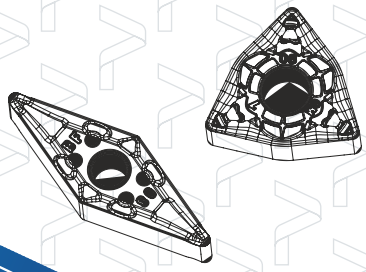

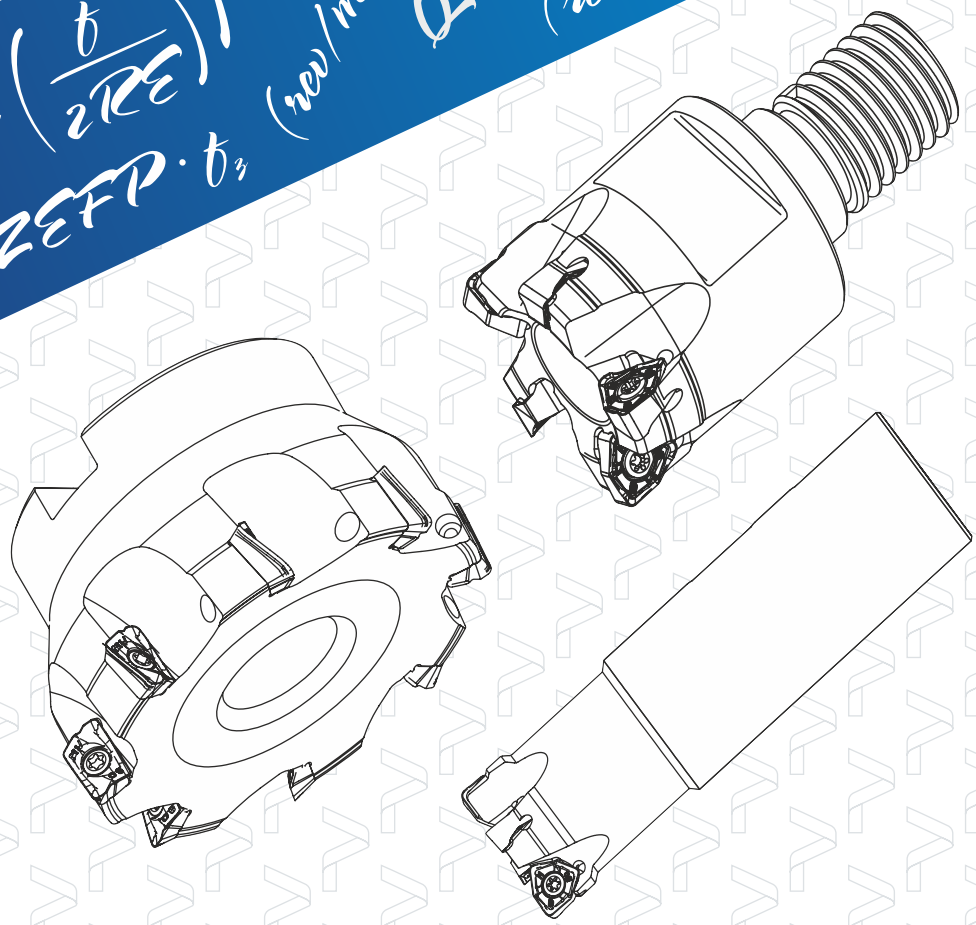

procarb CUTTING TOOLS

Transferring Technology Through Innovation

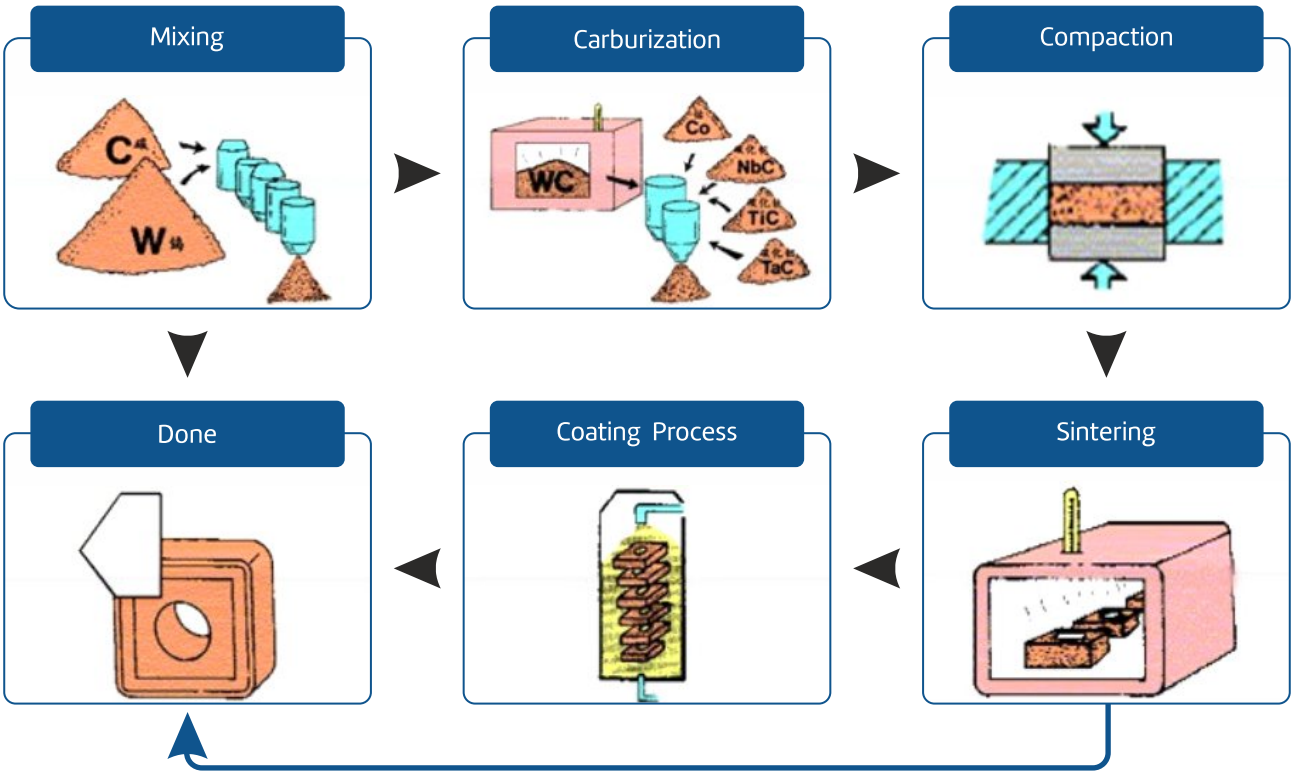

Production process of Cemented carbide

Mixing	Ball Mill	Spray Drying	Pressing
Sintering	Blank test	Grinding	Half finished product test
Passivating	Cleaning	Coating	Finished product test

Terms & Conditions

- No responsibility will be assumed for any printing inaccuracies or technical alterations.
- Presented images / photos are for reference purpose only
- Our terms of sale and payment conditions can be provided upon request.
- Consult the guidelines related to the icons for further information.
- All specifications contained within this catalogue may be altered without prior notice.
- Tool dimensions and lengths may vary from those specified in the catalogue.
- If you require products or sizes not listed in the catalogue, please contact us directly.
- Standard stock_____ •.

procarb CUTTING TOOLS

History

Procarb was founded with a vision to provide cutting-edge solutions for precision machining. Over the years, the company has expanded its product portfolio, invested in technology transfer for manufacturing cutting tools and built a team of experienced engineers and technicians.

Product Range

Procarb offers a diverse range of cutting tools, including:

1. Turning: High-performance turning inserts for various materials, including steel, cast iron, Stainless Steel & Super alloys.
2. Threading: Thread cutting taps, including right-hand and left-hand threads.
3. Milling Inserts: High-performance milling inserts for various materials, including steel, cast iron, Stainless Steel & Super alloys.
4. End Mills: Square and ball nose end mills and corner radius end mills.
5. Custom Tools: Procarb also offers custom tool design and manufacturing services to meet specific customer requirements.

Features and Benefits

Procarb cutting tools are known for their:

1. High Performance: Optimized geometry and materials for improved tool life and productivity.
2. Accuracy: Precise manufacturing processes ensure consistent tool quality and accuracy.
3. Reliability: Durable tools designed to withstand demanding machining applications.
4. Innovative Designs: Procarb's cutting tools often feature unique designs and coatings that enhance tool life and machining efficiency.

Industries Served

Procarb cutting tools are used in various industries, including:

1. Aerospace : Machining of advanced materials, such as titanium and composites.
2. Automotive : Production of engine components, gearboxes, and other vehicle parts.
3. Energy : Machining of components for oil and gas, wind energy, and renewable energy applications.
4. General Engineering : Production of parts for consumer goods, medical devices, and other industries.

At Procarb, innovation is at the heart of everything we do. We believe that transferring technology through innovation is crucial to staying ahead in the cutting tools industry. Our mission is to harness the power of innovation to deliver cutting-edge solutions that enhance our customers' productivity, efficiency, and competitiveness.

Innovation Strategy

Procarb's innovation strategy is built around three key pillars:

1. Research and Development (R&D): We invest heavily in R&D to stay at the forefront of cutting tool technology. Our team of experienced engineers and researchers works closely with customers, universities, and other partners to identify emerging trends and develop new solutions.
2. Collaboration and Partnerships: We collaborate with leading manufacturers, suppliers, and academic institutions to leverage their expertise and stay informed about the latest advancements in materials science, machining processes, and tool design.
3. Customer Feedback and Support: We engage closely with our customers to understand their needs, gather feedback, and validate our innovative solutions. This ensures that our products meet the evolving demands of the industry.

Procarb's innovative solutions include

1. Advanced Coatings: We develop and apply advanced coatings that enhance tool life, reduce friction and improve machining efficiency.
2. Customized Tool Design: We use 3D advanced designing software to design customized tools that meet specific customer requirements.
3. Digital Twin Technology: Our digital twin platform simulates machining processes, allowing us to optimize tool performance, reduce waste, and improve production planning.

Procarb transfers technology through innovation in several ways

1. Training and Education: We provide training and education programs for customers, partners, and employees to ensure that they can effectively utilize our innovative solutions.
2. Knowledge Sharing: We share knowledge and best practices through webinars, workshops, and industry events to promote the adoption of new technologies.
3. Collaborative Projects: We engage in collaborative projects with customers, suppliers and academic institutions to develop and deploy new technologies.
4. Open Innovation: We encourage open innovation by sharing our expertise, resources and platforms with external partners to accelerate the development of new solutions.

Benefits

Procarb's approach to transferring technology through innovation offers numerous benefits, including:

1. Improved Productivity: Our innovative solutions enhance machining efficiency, reduce waste, and increase productivity.
2. Increased Competitiveness: Our customers gain a competitive edge by leveraging the latest cutting tool technologies and expertise.
3. Reduced Costs: Our solutions help customers reduce costs by minimizing tool waste, optimizing machining processes, and improving tool life.
4. Enhanced Sustainability: Our innovative solutions promote sustainable manufacturing practices by reducing energy consumption, waste and environmental impact.

Conclusion

Procarb is committed to transferring technology through innovation, driving growth, and improving productivity in the cutting tools industry. By embracing a culture of innovation, collaboration and knowledge sharing, we empower our customers to stay ahead in a rapidly evolving market. Procarb committed to delivering high-quality products and exceptional customer service with a strong focus on innovation and customer satisfaction, Procarb continues to grow and expand its presence in the global cutting tools market.

Contents			Page

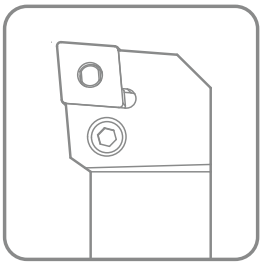

PROTURN

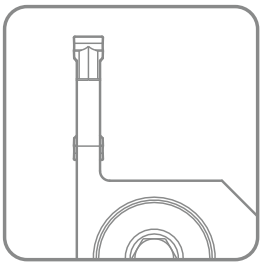

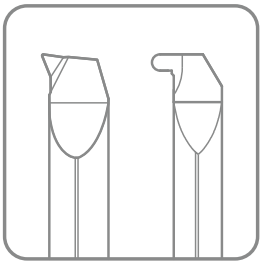

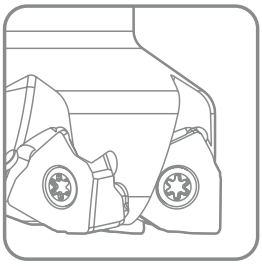

PROTHREAD

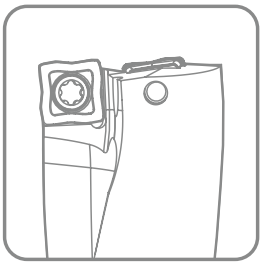

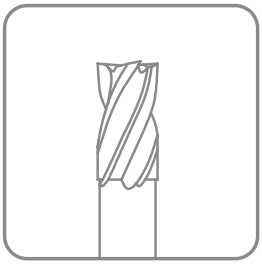

procarb CUTTING TOOLS

Contents			Page

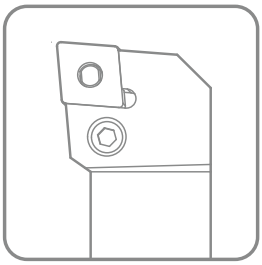

PROMILL

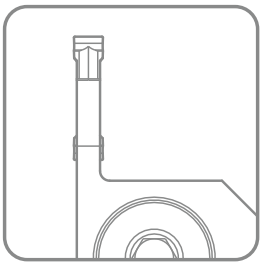

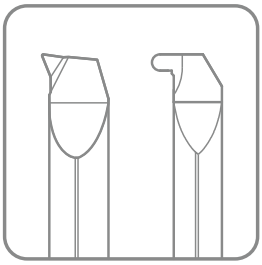

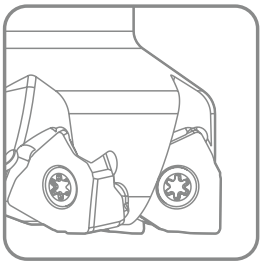

WORKPIECE MATERIALS

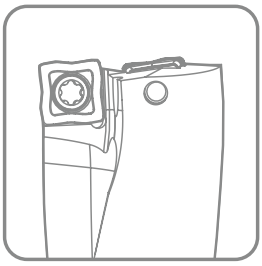

NOTES

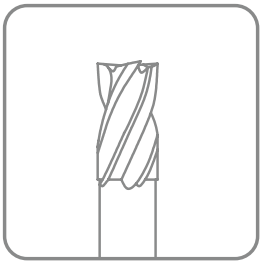

proturn

General turning inserts code key

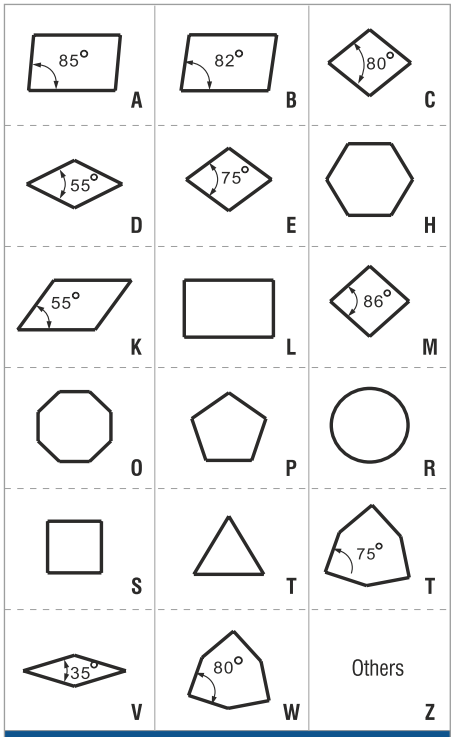

Shape Code

Code	Hole	Chipbreaker	Insert section	Code	Hole	Chipbreaker	Insert section
B	Yes	N/A	> 65°	N	N/A	N/A	
H	Yes	Single-sided	> 65°	R	N/A	Single-sided	
C	Yes	N/A	> 65°	F	N/A	Doble-Sided	
J	Yes	Doble-Sided	> 65°	A	Yes	N/A	
W	Yes	N/A	≤65°	M	Yes	Single-sided	
T	Yes	Single-sided	≤65°	G	Yes	Single-sided	
Q	Yes	N/A	≤65°	X	---	---	special
U	Yes	Doble-Sided	≤65°				

Chipbreaker and clamping form

C N M G

Major clearance angle

Code	Clearance Angle	Code	Clearance Angle
A	3°	B	5°
C	7°	D	15°
E	20°	F	25°
G	30°	N	0°
P	11°	O	Others

Tolerance (mm)

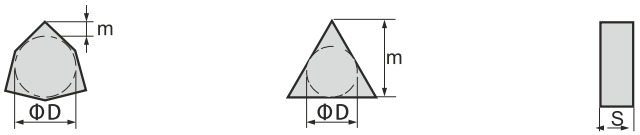

Class	Corner height (m)	Inscribed circle (ϕD)	Thickness (S)
A	±0.005	±0.025	±0.025
F	±0.005	±0.013	±0.025
C	±0.013	±0.025	±0.025
H	±0.013	±0.013	±0.025
E	±0.025	±0.025	±0.025
G	±0.025	±0.025	±0.13
J	±0.005	±0.05-±0.13	±0.025
K	±0.013	±0.05-±0.13	±0.025
L	±0.025	±0.05-±0.13	±0.025
M	±0.08-±0.18	±0.05-±0.13	±0.13
N	±0.08-±0.18	±0.05-±0.13	±0.025
U	±0.13-±0.38	±0.08-±0.25	±0.13

♦ Tolerance requirements M-class
(Distinguished by shape and inscribed circle size)
♦ Corner height (m) tolerance

Inscribed circle	Regular triangle	Square	80° rhombus	55° rhombus	35° rhombus	Circular
6.35	±0.08	±0.08	±0.08	±0.11	±0.16	---
9.525	±0.08	±0.08	±0.08	±0.11	±0.16	---
12.7	±0.13	±0.13	±0.13	±0.15	---	---
15.875	±0.15	±0.15	±0.15	±0.18	---	---
19.05	±0.15	±0.15	±0.15	±0.18	---	---
25.4	---	±0.18	---	---	---	---

♦ Inscribed circle (ϕD) tolerence

Inscribed circle	Regular triangle	Square	80° rhombus	55° rhombus	35° rhombus	Circular
6.35	±0.05	±0.05	±0.05	±0.05	±0.05	---
9.525	±0.05	±0.05	±0.05	±0.05	±0.05	±0.05
12.7	±0.08	±0.08	±0.08	±0.08	---	±0.08
15.875	±0.10	±0.10	±0.10	±0.10	---	±0.10
19.05	±0.10	±0.10	±0.10	±0.10	---	±0.10
25.4	---	±0.13	---	---	---	±0.13

General turning inserts code key

Inscribed circle diameter (mm)	C	D	R	S	T	V	W	K
32.00			32					
31.75			31					
25.40			25	25				
25.00	25	25	25					
20.00			20					
19.05	19		19	19	33			
16.00		19	16					
15.875	16		15	15	27			
12.70	12	15	12	12	22	22	08	
12.00			12					
10.00			10					
9.525	09	11	09	09	16	16	06	16
8.00			08					
6.35	06	07			11	11		
6.00			06					
5.56					09			
5.50			05					
3.97					06			

Insert shape

Cutting edge length

Code	Thickness (mm)
12	12.70
10	11.11
T9	9.72
09	9.52
07	7.94
T6	6.75
06	6.35
T5	5.95
05	5.56
T4	4.96
04	4.76
T3	3.97
03	3.18
T2	2.58
02	2.38
T1	1.98
01	1.59
T0	0.99
00	0.79

Insert thickness

12 04 08 – GM (ISO)

4 3 2 (Inch)

Inscribed circle

Code	Inscribed circle diameter (mm)
2	6.35
3	9.525
4	12.7
5	15.875
6	19.05
8	25.4

Thickness

Code	Thickness (mm)
2	3.18
3	4.76
4	6.35
5	7.94
6	9.52

Corner radius

Code	Corner radius (mm)
0	0.2
1	0.4
2	0.8
3	1.2
4	1.6
5	2.0
6	2.4

Corner radius code

Code	Corner radius (mm)
00	No fillet
02	0.2
04	0.4
08	0.8
12	1.2
16	1.6
20	2.0
24	2.4
32	3.2
X	Others
Insert diameter Mo (Metric)	Round insert

Chipbreaker code

AR	AM	TM
BR	BM	DM
JW	MM	MS

Turning Grades

Turning Grades		P Steel				M Stainless Steel			K Cast Iron			N Non-Ferrous		S Super Alloys		H Hard Materials	
		P10	P20	P30	P40	M10	M20	M30	K10	K20	K30	N10	N20	S10	S20	H5	H21
CVD	PC3115									PC3115							
CVD	PC3215									PC3215							
CVD	PC2325		PC2325			PC2325				PC2325							
CVD	PC2025	PC2025				PC2025				PC2025							
CVD	PC2125		PC2125			PC2125				PC2125							
PVD	PC4025	PC4025				PC4025				PC4025							
PVD	PC4325						PC4325										PC4325
PVD	PC4925						PC4925								PC4925		
PVD	PC4525		PC4525				PC4525			PC4525							

Turning Grades

PC3115	K10-K30	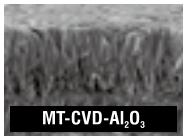	**First Choice for Cast Iron** MT-CVD coated, the substrate with excellent hardness and stripping resistance in combination withAl_2O_3(thick) coating, the smooth surface of the tools, which is suitable for turning of cast iron at middle and high speed.
PC3215	K10-K30	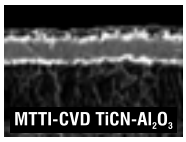	**Stable Machining of Cast Iron** High wear-resistant substrate, new generation coating process with perfect combination of MTTI (CN), Super Al_2O_3, TiCN coating, initial grades of ductile cast iron, forged cast iron, high cutting speed applications.
PC2325	P20-P40 M20-M30 K10-K20	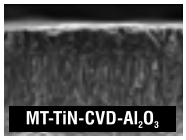	**First choice for general turning** With optimised toughness and hardness of the substrate and MT-TiN Al_2O_3 and coating with special treatment process, excellent performance of the double layer coating suitable for Steel, Stainless Steel and Cast iron
PC2025	P10-P30 M10-M20 K10-K20	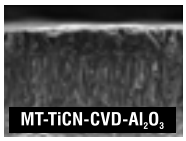	**First choice for Steel with wear resistance** Cutting Edge with wear resistance, toughness in combination with TiCN + Al_2O_3 + TiN Multi layer MT-CVDcoating which is Suitable For steel machining.
PC2125	P10-P40 M10-M20 K10-K20	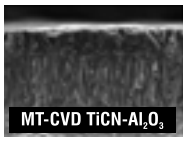	**High Wear resistance grade** Special strength toughness of the inserts substrates with combination of MT-TiCN ultra fine Al_2O_3. Common grade for steel, Stainless steel, and Cast iron
PC4025	P10-P30 M10-M20 K10-K20	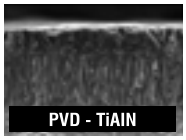	**First Choice for General MAchining, Steel, Stainless Steel and Cast iron** 2-4um TiAlN PVD coated combinating with ultra fine partides' substrates with high- toughness, suitabe for all materials, stainless steel, steel, cast alloy in finishing, semi-finishing
PC4325	M10-M30 H5-H21	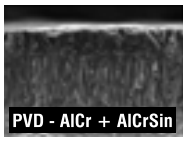	**First choice for Stainless Steels and Harden Steels** The latest AlCr + AlCrSin PVD coatings, combined with ultra-fine particle substrates, has high wear resistance and excellent performance in finishing and semi-finishing of stainless and hardened steel
PC4925	M10-M30 S10-S20	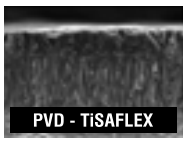	**First choice for Super Alloys and Stainless Steels** The latest high performance coating for super alloys and Stainless Steel. Excellent surface finish with unstable conditions for high temperature alloys.
PC4525	P10-P30 M10-M20 K10-K20	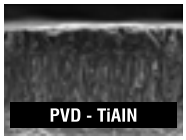	**First Choice for General Machining, Steel, Stainless Steel and Cast iron** 2-4um TiAlN PVD coated combinating with ultra fine partides' substrates with high- toughness, suitabe for all materials, stainless steel, steel, cast alloy in finishing, semi-finishing

Recommended list of Insert Chipbreakers negative

S.No.	Use	Features / Blade Shape	Chip Breaker
1	For medium turning semi-finishing in steel	AM 	M-class double-sided chipbreaker, negative chamfer design, high edge strength, suitable for medium turning with unstable working conditions
2	For roughing in steel	AR 	M-class double-sided chipbreaker is the preferred geometry for roughing operations. It has good edge strength, high metal removal rate, good wear resistance and cutting life.
3	For finishing in stainless steel	BF 	M-class double-sided chip breaker, with double positive rake angle, sharp edge, low cutting resistance, special inclination angle design, can obtain high-guality machined surface.
4	For medium turning in stainless steel	BM 	M-class double-sided chip breaker, double positive rake angle, higher edge strength than WMF, suitable for general machining of stainless steel, has a wide range of applications.
5	For roughing in stainless steel	BR 	M-class double-sided chip breaker, variable width + variable rake angle design, suitable for rough machining of stainless steel.
6	For medium turning in alloy	DM 	S-class double-sidedchip breaker uses double positive rake angles to perfectly combine the sharpness and strength of the Insert, the cutting resistance is small and the wider chip breaker ensures space for chip deformation, thereby reducing groove wear.
7	For universal roughing & semi-finishing	CM 	K-class double-sided chip breaker, double positive rake angle, higher edge strength, suitable for general machining of cast iron and wide range of applications
8	For universal general purpose	MA 	P-class double-sided chip breaker, double positive land provides sharp cutting action higher edge strength, suitable for general machining of steel, stainless steel, cast iron and wide range of applications
9	For medium to roughing in steels	MS 	P-class double-sided chip breaker, double positive land + tough cutting edge + good chip control provides sharp cutting action higher edge strength, suitable for general machining of steel, stainless steel and wide range of applications
10	For medium and semi-finishing in steels	TM 	P-class double-sided chip breaker, positive land + good chip control design, high edge strength, suitable for medium turning for steels and stainless steels

Recommended list of Insert Chipbreakers positive

S.No.	Use	Features / Blade Shape	Chip Breaker
1	For general purpose semi-finishing	JW 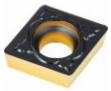	Single sided positive chip breaker, variable width + variable rake angle design, suitable for semi-finishing of wide range of materials
2	For positive finishing of materials	MM 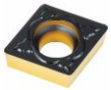	Single sided positive chip breaker, inclined cutting edge design reduces cutting force and reduce vibrations and ensure the machining surface quality finishing application of wide range of materials

CNMA / CNMG

	L	IC	S
CN** 1204	12.0	12.7	4.76
CN** 1606	16.0	15.875	6.35
CN** 1906	19.0	19.05	6.35

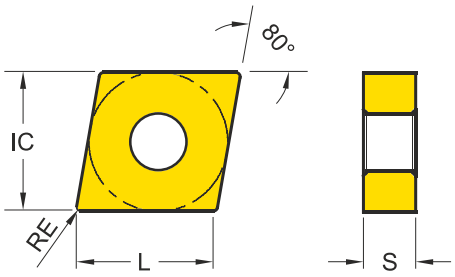

DESIGNATION	RE	Fn (mm/Rev)	Ap (mm)	CVD					PVD		
				PC3115	PC3215	PC2325	PC2025	PC2125	PC4025	PC4325	PC4925
CNMA120404	0.40	0.15 - 0.50	0.50 - 2.50	○	○						
CNMA120408	0.80	0.15 - 0.50	1.00 - 3.50	●	●						
CNMA120412	1.20	0.15 - 0.50	1.50 - 5.00	●	●						
CNMG120404-CM	0.40	0.10 - 0.30	0.50 - 2.50	○	○						
CNMG120408-CM	0.80	0.15 - 0.30	0.50 - 2.50	●	●						
CNMG120412-CM	1.20	0.15 - 0.30	1.50 - 3.00	●	●						
CNMG120416-CM	1.60	0.15 - 0.30	1.50 - 4.00	○	○						
CNMG160608-CM	0.80	0.20 - 0.40	1.50 - 5.00	○	○						
CNMG160612-CM	1.20	0.20 - 0.40	1.50 - 5.00	○	○						
CNMG190608-CM	0.80	0.30 - 0.80	3.00 - 9.00	○	○						
CNMG190612-CM	1.20	0.30 - 0.80	3.00 - 9.00	○	○						
CNMG120408-AM	0.80	0.15 - 0.30	0.50 - 2.00			●	●				
CNMG120412-AM	1.20	0.15 - 0.30	1.50 - 3.00			●	●				
CNMG190612-AM	1.20	0.30 - 0.80	3.00 - 9.00			●	●				
CNMG190612-AR	1.20	0.30 - 0.80	3.00 - 9.00			○					
CNMG190616-AR	1.60	0.30 - 0.80	3.00 - 9.00			○					
CNMG120404-TM	0.40	0.05 - 0.25	0.50 - 1.50			●	○	○			
CNMG120408-TM	0.80	0.05 - 0.25	0.50 - 2.50			●		○			
CNMG120412-TM	1.20	0.05 - 0.25	1.00 - 2.50			●	○	○			

● Stock Item ○ Non-Stock Item

CUTTING SPEED											
Cutting Speed			Vc (m/min)								
ISO	MG	Sub-Group	PC3115	PC3215	PC2325	PC2025	PC4025	PC4325	PC4925	PC2125	PC4525
			Min - Max	Min - Max	Min - Max	Min - Max	Min - Max	Min - Max	Min - Max	Min - Max	Min - Max
P	P1 - P3	Low Carbon Steel	-	-	200-250-300	200-220-250	180-200-230	-	-	200-300-300	-
	P4 - P7	Medium -Alloyed Steel	-	-	150-200-250	120-150-250	100-150-180	-	-	150-200-250	-
	P8 - P12	High-Alloyed Steel	-	-	100-150-180	80-120-160	80-120-150	-	-	100-150-180	-
M	M1 - M3	Ferritic & Martensitic Steel	-	-	100-120-180	-	110-130-150	100-150-180	100-120-180	100-120-180	-
	M4 - M5	Austenitic Stainless Steel	-	-	90-120-150	-	70-100-130	80-100-150	90-120-150	90-120-150	-
K	K1 - K4	Grey Cast Iron	250-350-600	150-200-300	150-200-220	-	150-200-220	-	-	150-200-220	-
	K5 - K7	Ductile Iron	200-250-300	100-150-250	100-150-200	-	100-150-200	-	-	100-150-200	-
N	N1 - N11	Non-Ferrous Metals	-	-	-	-	-	-	-	-	-
S	S1 - S3	Titanium Alloys	-	-	-	-	-	30-50-80	40-80-120	-	-
	S11 - S13	Heat-Resistant Alloy	-	-	-	-	-	-	20-40-60	-	-
H	H5 - H21	Hard Materials	-	-	-	-	-	60-100-150	-	-	-

CNMA / CNMG

	L	IC	S
CN** 1204	12.0	12.7	4.76
CN** 1606	16.0	15.875	6.35
CN** 1906	19.0	19.05	6.35

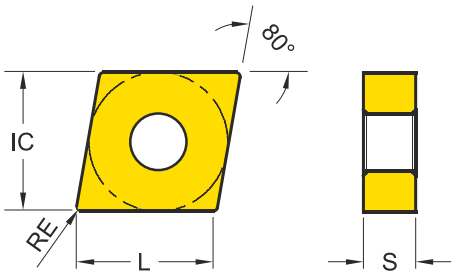

DESIGNATION	RE	Fn (mm/Rev)	Ap (mm)	CVD					PVD		
				PC3115	PC3215	PC2325	PC2025	PC2125	PC4025	PC4325	PC4925
CNMG120404-BF	0.40	0.05 - 0.25	0.50 - 1.50							●	●
CNMG120408-BF	0.80	0.05 - 0.25	0.50 - 2.50							●	
CNMG120404-MS	0.40	0.05 - 0.25	0.50 - 1.50							●	●
CNMG120408-MS	0.80	0.05 - 0.25	0.50 - 2.50							●	●
CNMG120408-BM	0.80	0.15 - 0.30	0.50 - 2.00							●	●
CNMG120412-BM	1.20	0.15 - 0.30	1.50 - 3.00							●	●
CNMG120416-BM	1.60	0.15 - 0.30	1.50 - 4.00							○	○
CNMG160608-BM	0.80	0.20 - 0.40	1.50 - 5.00							○	○
CNMG160612-BM	1.20	0.20 - 0.40	1.50 - 5.00							○	○
CNMG190608-BM	0.80	0.30 - 0.80	3.00 - 9.00							○	○
CNMG190612-BM	1.20	0.30 - 0.80	3.00 - 9.00							○	○
CNMG120404-MA	0.40	0.15 - 0.30	0.50 - 2.00							○	
CNMG120408-MA	0.80	0.15 - 0.30	1.50 - 2.50							●	●
CNMG120412-MA	1.20	0.15 - 0.30	1.50 - 3.00							●	●

● Stock Item ○ Non-Stock Item

CUTTING SPEED											
Cutting Speed			Vc (m/min)								
ISO	MG	Sub-Group	PC3115	PC3215	PC2325	PC2025	PC4025	PC4325	PC4925	PC2125	PC4525
			Min - Max	Min - Max	Min - Max	Min - Max	Min - Max	Min - Max	Min - Max	Min - Max	Min - Max
P	P1 - P3	Low Carbon Steel	-	-	200-250-300	200-220-250	180-200-230	-	-	200-300-300	-
	P4 - P7	Medium -Alloyed Steel	-	-	150-200-250	120-150-250	100-150-180	-	-	150-200-250	-
	P8 - P12	High-Alloyed Steel	-	-	100-150-180	80-120-160	80-120-150	-	-	100-150-180	-
M	M1 - M3	Ferritic & Martensitic Steel	-	-	100-120-180	-	110-130-150	100-150-180	100-120-180	100-120-180	-
	M4 - M5	Austenitic Stainless Steel	-	-	90-120-150	-	70-100-130	80-100-150	90-120-150	90-120-150	-
K	K1 - K4	Grey Cast Iron	250-350-600	150-200-300	150-200-220	-	150-200-220	-	-	150-200-220	-
	K5 - K7	Ductile Iron	200-250-300	100-150-250	100-150-200	-	100-150-200	-	-	100-150-200	-
N	N1 - N11	Non-Ferrous Metals	-	-	-	-	-	-	-	-	-
S	S1 - S3	Titanium Alloys	-	-	-	-	-	30-50-80	40-80-120	-	-
	S11 - S13	Heat-Resistant Alloy	-	-	-	-	-	-	20-40-60	-	-
H	H5 - H21	Hard Materials	-	-	-	-	-	60-100-150	-	-	-

DNMA / DNMG

	L	IC	S
DN** 1504	15.0	12.7	4.76
DN** 1506	15.0	12.7	6.35
DN** 1104	11.60	9.52	4.76

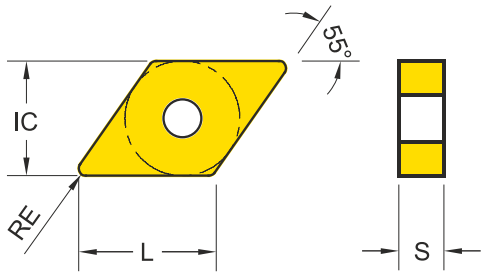

DESIGNATION	RE	Fn (mm/Rev)	Ap (mm)	CVD					PVD		
				PC3115	PC3215	PC2325	PC2025	PC2125	PC4025	PC4325	PC4925
DNMA150408	0.80	0.15 - 0.50	1.00 - 3.00	●	●						
DNMA150412	1.20	0.15 - 0.50	1.50 - 3.00	●	●						
DNMA150612	1.20	0.15 - 0.50	1.50 - 3.00	●	●						
DNMA150608	0.80	0.15 - 0.50	1.00 - 3.00	●	●						
DNMG110404-CM	0.40	0.20 - 0.50	1.00 - 3.00	○	○						
DNMG110408-CM	0.80	0.20 - 0.50	1.00 - 2.00	●	●						
DNMG110412-CM	1.20	0.20 - 0.50	1.00 - 2.50	○	○						
DNMG150404-CM	0.40	0.20 - 0.40	1.00 - 2.00	●	●						
DNMG150408-CM	0.80	0.15 - 0.50	1.00 - 2.50	●	●						
DNMG150412-CM	1.20	0.15 - 0.50	1.00 - 2.50	○	○						
DNMG150604-CM	0.40	0.15 - 0.30	1.50 - 2.00	●	●						
DNMG150608-CM	0.80	0.15 - 0.50	1.50 - 3.00	●	●						
DNMG150612-CM	1.20	0.15 - 0.50	1.50 - 3.00	○	○						
DNMG150408-AM	0.80	0.20 - 0.50	1.00 - 3.00			●	●				
DNMG150608-AM	0.80	0.20 - 0.50	1.00 - 3.00			●					
DNMG150404-TM	0.40	0.20 - 0.50	1.00 - 2.00			●		○			
DNMG150408-TM	0.80	0.20 - 0.50	1.00 - 2.00			●					
DNMG150412-TM	1.20	0.20 - 0.50	1.00 - 2.50			○					
DNMG150604-TM	0.40	0.20 - 0.50	1.00 - 2.00			●	●	○			

● Stock Item ○ Non-Stock Item

CUTTING SPEED											
Cutting Speed			Vc (m/min)								
ISO	MG	Sub-Group	PC3115	PC3215	PC2325	PC2025	PC4025	PC4325	PC4925	PC2125	PC4525
			Min - Max	Min - Max	Min - Max	Min - Max	Min - Max	Min - Max	Min - Max	Min - Max	Min - Max
P	P1 - P3	Low Carbon Steel	-	-	200-250-300	200-220-250	180-200-230	-	-	200-300-300	-
	P4 - P7	Medium -Alloyed Steel	-	-	150-200-250	120-150-250	100-150-180	-	-	150-200-250	-
	P8 - P12	High-Alloyed Steel	-	-	100-150-180	80-120-160	80-120-150	-	-	100-150-180	-
M	M1 - M3	Ferritic & Martensitic Steel	-	-	100-120-180	-	110-130-150	100-150-180	100-120-180	100-120-180	-
	M4 - M5	Austenitic Stainless Steel	-	-	90-120-150	-	70-100-130	80-100-150	90-120-150	90-120-150	-
K	K1 - K4	Grey Cast Iron	250-350-600	150-200-300	150-200-220	-	150-200-220	-	-	150-200-220	-
	K5 - K7	Ductile Iron	200-250-300	100-150-250	100-150-200	-	100-150-200	-	-	100-150-200	-
N	N1 - N11	Non-Ferrous Metals	-	-	-	-	-	-	-	-	-
S	S1 - S3	Titanium Alloys	-	-	-	-	-	30-50-80	40-80-120	-	-
	S11 - S13	Heat-Resistant Alloy	-	-	-	-	-	-	20-40-60	-	-
H	H5 - H21	Hard Materials	-	-	-	-	-	60-100-150	-	-	-

DNMA / DNMG

	L	IC	S
DN** 1504	15.0	12.7	4.76
DN** 1506	15.0	12.7	6.35
DN** 1104	11.60	9.52	4.76

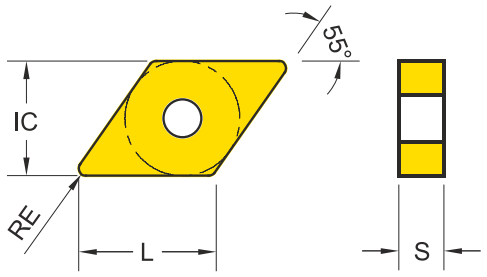

DESIGNATION	RE	Fn (mm/Rev)	Ap (mm)	CVD					PVD		
				PC3115	PC3215	PC2325	PC2025	PC2125	PC4025	PC4325	PC4925
DNMG150608-TM	0.80	0.20 - 0.50	1.00 - 2.00			●	●	○			
DNMG150612-TM	1.20	0.20 - 0.50	1.00 - 2.50			○					
DNMG110408-BM	0.80	0.20 - 0.25	0.50 - 2.50							●	○
DNMG110412-BM	1.20	0.20 - 0.30	0.50 - 2.50							○	○
DNMG150608-BM	0.80	0.20 - 0.30	0.50 - 2.50							●	●
DNMG150612-BM	1.20	0.20 - 0.30	0.50 - 2.50							○	○
DNMG110404-BF	0.40	0.07 - 0.30	0.20 - 1.50							○	○
DNMG150604-BF	0.40	0.07 - 0.30	0.20 - 1.50							●	●
DNMG150608-BF	0.80	0.07 - 0.30	0.20 - 1.50							●	●

● Stock Item ○ Non-Stock Item

CUTTING SPEED											
Cutting Speed			Vc (m/min)								
ISO	MG	Sub-Group	PC3115	PC3215	PC2325	PC2025	PC4025	PC4325	PC4925	PC2125	PC4525
			Min - Max	Min - Max	Min - Max	Min - Max	Min - Max	Min - Max	Min - Max	Min - Max	Min - Max
P	P1 - P3	Low Carbon Steel	-	-	200-250-300	200-220-250	180-200-230	-	-	200-300-300	-
	P4 - P7	Medium -Alloyed Steel	-	-	150-200-250	120-150-250	100-150-180	-	-	150-200-250	-
	P8 - P12	High-Alloyed Steel	-	-	100-150-180	80-120-160	80-120-150	-	-	100-150-180	-
M	M1 - M3	Ferritic & Martensitic Steel	-	-	100-120-180	-	110-130-150	100-150-180	100-120-180	100-120-180	-
	M4 - M5	Austenitic Stainless Steel	-	-	90-120-150	-	70-100-130	80-100-150	90-120-150	90-120-150	-
K	K1 - K4	Grey Cast Iron	250-350-600	150-200-300	150-200-220	-	150-200-220	-	-	150-200-220	-
	K5 - K7	Ductile Iron	200-250-300	100-150-250	100-150-200	-	100-150-200	-	-	100-150-200	-
N	N1 - N11	Non-Ferrous Metals	-	-	-	-	-	-	-	-	-
S	S1 - S3	Titanium Alloys	-	-	-	-	-	30-50-80	40-80-120	-	-
	S11 - S13	Heat-Resistant Alloy	-	-	-	-	-	-	20-40-60	-	-
H	H5 - H21	Hard Materials	-	-	-	-	-	60-100-150	-	-	-

SNMA / SNMG

	L	IC	S
SN** 1204	12.0	12.7	4.76
SN** 1506	15.0	15.875	6.35

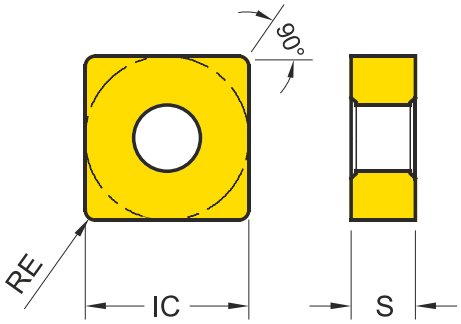

DESIGNATION	RE	Fn (mm/Rev)	Ap (mm)	CVD					PVD		
				PC3115	PC3215	PC2325	PC2025	PC2125	PC4025	PC4325	PC4925
SNMA120408	0.80	0.15 - 0.50	1.00 - 3.50	●	●						
SNMA120412	1.20	0.15 - 0.50	1.00 - 3.50	●	●						
SNMG120404-CM	0.40	0.10 - 0.30	1.00 - 2.50	○	○						
SNMG120408-CM	0.80	0.20 - 0.40	1.00 - 3.50	●	●						
SNMG120412-CM	1.20	0.20 - 0.40	1.00 - 3.50	●	●						
SNMG190608-CM	0.80	0.30 - 0.80	3.00 - 9.00	○	○						
SNMG190612-CM	1.20	0.30 - 0.80	3.00- 9.00	○	○						
SNMG190612-AR	1.20	0.30 - 0.80	3.00 - 9.00			○					
SNMG120404-TM	0.40	0.10 - 0.30	1.00 - 3.00			○	○	○			
SNMG120408-TM	0.80	0.20 - 0.40	1.00 - 3.50			●	●				
SNMG120412-TM	1.20	0.20 - 0.50	1.00 - 3.50			●	●	○			
SNMG190612-AS	1.20	0.30 - 0.80	3.00 - 9.00			○					
SNMG120408-MS	0.80	0.07 - 0.30	1.00 - 3.50							●	●
SNMG120412-MS	1.20	0.07 - 0.35	1.00 - 3.50							○	○
SNMG120408-BM	0.80	0.20 - 0.35	1.00 - 3.50							●	●
SNMG120412-BM	1.20	0.20 - 0.35	1.00 - 3.50							●	●
SNMG120404-MA	0.40	0.50 - 0.30	1.00 - 3.50							●	●
SNMG120408-MA	0.80	0.50 - 0.35	1.00 - 3.50							●	●
SNMG120412-MA	1.20	0.50 - 0.35	1.00 - 3.50							●	●

● Stock Item ○ Non-Stock Item

CUTTING SPEED											
Cutting Speed			Vc (m/min)								
ISO	MG	Sub-Group	PC3115	PC3215	PC2325	PC2025	PC4025	PC4325	PC4925	PC2125	PC4525
			Min - Max	Min - Max	Min - Max	Min - Max	Min - Max	Min - Max	Min - Max	Min - Max	Min - Max
P	P1 - P3	Low Carbon Steel	-	-	200-250-300	200-220-250	180-200-230	-	-	200-300-300	-
	P4 - P7	Medium -Alloyed Steel	-	-	150-200-250	120-150-250	100-150-180	-	-	150-200-250	-
	P8 - P12	High-Alloyed Steel	-	-	100-150-180	80-120-160	80-120-150	-	-	100-150-180	-
M	M1 - M3	Ferritic & Martensitic Steel	-	-	100-120-180	-	110-130-150	100-150-180	100-120-180	100-120-180	-
	M4 - M5	Austenitic Stainless Steel	-	-	90-120-150	-	70-100-130	80-100-150	90-120-150	90-120-150	-
K	K1 - K4	Grey Cast Iron	250-350-600	150-200-300	150-200-220	-	150-200-220	-	-	150-200-220	-
	K5 - K7	Ductile Iron	200-250-300	100-150-250	100-150-200	-	100-150-200	-	-	100-150-200	-
N	N1 - N11	Non-Ferrous Metals	-	-	-	-	-	-	-	-	-
S	S1 - S3	Titanium Alloys	-	-	-	-	-	30-50-80	40-80-120	-	-
	S11 - S13	Heat-Resistant Alloy	-	-	-	-	-	-	20-40-60	-	-
H	H5 - H21	Hard Materials	-	-	-	-	-	60-100-150	-	-	-

TNMA / TNMG

	L	IC	S
TN** 1604	16.0	9.525	4.76
TN** 2204	22.0	12.7	4.76

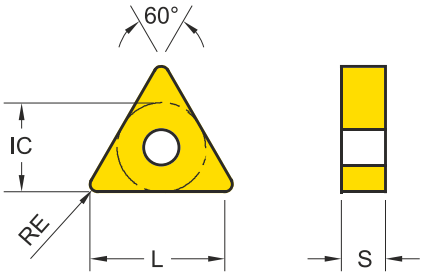

DESIGNATION	RE	Fn (mm/Rev)	Ap (mm)	CVD					PVD		
				PC3115	PC3215	PC2325	PC2025	PC2125	PC4025	PC4325	PC4925
TNMA160404	0.40	0.15 - 0.50	1.00 - 3.00	○	○						
TNMA160412	1.20	0.15 - 0.50	1.50 - 3.50	●	●						
TNMA160408	0.80	0.15 - 0.50	1.50 - 3.00	●	●						
TNMG160404-CM	0.40	0.10 - 0.30	1.00 - 3.00	○	○						
TNMG160408-CM	0.80	0.10 - 0.30	1.50 - 3.00	●	●						
TNMG160412-CM	1.20	0.10 - 0.40	1.50 - 3.50	●	●						
TNMG160404-AM	0.40	0.15 - 0.50	1.00 - 3.00			●					
TNMG160408-AM	0.80	0.15 - 0.50	1.50 - 3.00			●					
TNMG160412-AM	1.20	0.15 - 0.50	1.50 - 3.50			●					
TNMG160404-TM	0.40	0.10 - 0.30	1.00 - 3.00			●	●				
TNMG160408-TM	0.80	0.10 - 0.30	1.50 - 3.00			●					
TNMG160412-TM	1.20	0.10 - 0.30	1.50 - 3.50			●	○				
TNMG160404-BF	0.40	0.05 - 0.20	0.05 - 0.30							●	●
TNMG160408-BF	0.80	0.05 - 0.20	0.05 - 0.30							●	○
TNMG160404-MS	0.40	0.05 - 0.20	0.20 - 0.40							●	●
TNMG160408-MS	0.80	0.05 - 0.20	0.20 - 0.40							●	
TNMG160412-MS	1.20	0.05 - 0.20	0.20 - 0.40							●	
TNMG160404-BM	0.40	0.10 - 0.25	0.30 - 0.50							●	●
TNMG160408-BM	0.80	0.10 - 0.25	0.50 - 1.50							●	●
TNMG160412-BM	1.20	0.10 - 0.25	0.50 - 2.00							●	●
TNMG160408-MA	0.80	0.15 - 0.50	0.30 - 0.50							●	●
TNMG160412-MA	1.20	0.15 - 0.50	0.50 - 1.50							●	●

● Stock Item ○ Non-Stock Item

CUTTING SPEED

Cutting Speed			Vc (m/min)								
ISO	MG	Sub-Group	PC3115	PC3215	PC2325	PC2025	PC4025	PC4325	PC4925	PC2125	PC4525
			Min - Max	Min - Max	Min - Max	Min - Max	Min - Max	Min - Max	Min - Max	Min - Max	Min - Max
P	P1 - P3	Low Carbon Steel	-	-	200-250-300	200-220-250	180-200-230	-	-	200-300-300	-
	P4 - P7	Medium -Alloyed Steel	-	-	150-200-250	120-150-250	100-150-180	-	-	150-200-250	-
	P8 - P12	High-Alloyed Steel	-	-	100-150-180	80-120-160	80-120-150	-	-	100-150-180	-
M	M1 - M3	Ferritic & Martensitic Steel	-	-	100-120-180	-	110-130-150	100-150-180	100-120-180	100-120-180	-
	M4 - M5	Austenitic Stainless Steel	-	-	90-120-150	-	70-100-130	80-100-150	90-120-150	90-120-150	-
K	K1 - K4	Grey Cast Iron	250-350-600	150-200-300	150-200-220	-	150-200-220	-	-	150-200-220	-
	K5 - K7	Ductile Iron	200-250-300	100-150-250	100-150-200	-	100-150-200	-	-	100-150-200	-
N	N1 - N11	Non-Ferrous Metals	-	-	-	-	-	-	-	-	-
S	S1 - S3	Titanium Alloys	-	-	-	-	-	30-50-80	40-80-120	-	-
	S11 - S13	Heat-Resistant Alloy	-	-	-	-	-	-	20-40-60	-	-
H	H5 - H21	Hard Materials	-	-	-	-	-	60-100-150	-	-	-

VNMG

	L	IC	S
VN** 1604	16.0	9.525	4.76

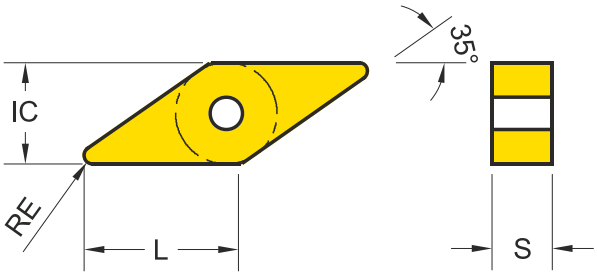

DESIGNATION	RE	Fn (mm/Rev)	Ap (mm)	CVD					PVD		
				PC3115	PC3215	PC2325	PC2025	PC2125	PC4025	PC4325	PC4925
VNMG160404-CM	0.40	0.20 - 0.40	0.50 - 2.50	●	●						
VNMG160408-CM	0.80	0.20 - 0.40	1.00 - 3.00	●	●						
VNMG160404-AM	0.40	0.20 - 0.35	1.00 - 2.00			●	●				
VNMG160408-AM	0.80	0.20 - 0.35	1.00 - 2.00				●				
VNMG160404-TM	0.40	0.20 - 0.30	0.50 - 1.50			●	●	○			
VNMG160408-TM	0.80	0.20 - 0.30	0.50 - 1.50			●					
VNMG160404-BF	0.40	0.05 - 0.30	0.20 - 1.00							●	●
VNMG160408-BF	0.80	0.05 - 0.30	0.20 - 1.50							●	●
VNMG160404-BM	0.40	0.20 - 0.35	0.50 - 1.50							●	●
VNMG160408-BM	0.80	0.20 - 0.35	0.50 - 1.50							●	●
VNMG160404-MA	0.40	0.20 - 0.35	0.50 - 1.50							○	

● Stock Item ○ Non-Stock Item

CUTTING SPEED											
Cutting Speed			Vc (m/min)								
ISO	MG	Sub-Group	PC3115	PC3215	PC2325	PC2025	PC4025	PC4325	PC4925	PC2125	PC4525
			Min - Max	Min - Max	Min - Max	Min - Max	Min - Max	Min - Max	Min - Max	Min - Max	Min - Max
P	P1 - P3	Low Carbon Steel	-	-	200-250-300	200-220-250	180-200-230	-	-	200-300-300	-
	P4 - P7	Medium -Alloyed Steel	-	-	150-200-250	120-150-250	100-150-180	-	-	150-200-250	-
	P8 - P12	High-Alloyed Steel	-	-	100-150-180	80-120-160	80-120-150	-	-	100-150-180	-
M	M1 - M3	Ferritic & Martensitic Steel	-	-	100-120-180	-	110-130-150	100-150-180	100-120-180	100-120-180	-
	M4 - M5	Austenitic Stainless Steel	-	-	90-120-150	-	70-100-130	80-100-150	90-120-150	90-120-150	-
K	K1 - K4	Grey Cast Iron	250-350-600	150-200-300	150-200-220	-	150-200-220	-	-	150-200-220	-
	K5 - K7	Ductile Iron	200-250-300	100-150-250	100-150-200	-	100-150-200	-	-	100-150-200	-
N	N1 - N11	Non-Ferrous Metals	-	-	-	-	-	-	-	-	-
S	S1 - S3	Titanium Alloys	-	-	-	-	-	30-50-80	40-80-120	-	-
	S11 - S13	Heat-Resistant Alloy	-	-	-	-	-	-	20-40-60	-	-
H	H5 - H21	Hard Materials	-	-	-	-	-	60-100-150	-	-	-

WNMA / WNMG

	L	IC	S
WN** 0604	6.0	9.525	4.76
WN** 0804	8.0	12.7	4.76

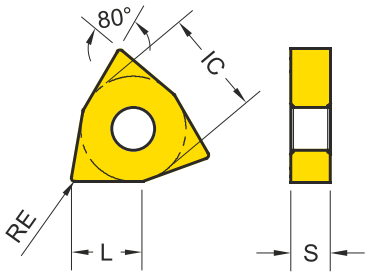

DESIGNATION	RE	Fn (mm/Rev)	Ap (mm)	CVD					PVD		
				PC3115	PC3215	PC2325	PC2025	PC2125	PC4025	PC4325	PC4925
WNMA080408	0.80	0.15 - 0.50	0.50 - 2.50	●	●						
WNMA080412	1.20	0.15 - 0.50	1.00 - 3.50	●	●						
WNMA080404	0.40	0.15 - 0.50	1.50 - 5.00	○	○						
WNMG060404-CM	0.40	0.15 - 0.30	1.00 - 2.50	○	○						
WNMG060408-CM	0.80	0.15 - 0.30	1.00 - 2.50	●	●						
WNMG060412-CM	1.20	0.15 - 0.30	1.00 - 3.00	●	●						
WNMG080408-CM	0.80	0.15 - 0.30	1.00 - 3.00	●	●						
WNMG080412-CM	1.20	0.15 - 0.30	1.00 - 3.00	●	●						
WNMG080408-AM	0.80	0.15 - 0.30	1.00 - 3.00			●					
WNMG080412-AM	1.20	0.15 - 0.30	1.00 - 3.00			●	●				
WNMG080408-TM	0.80	0.15 - 0.25	1.00 - 2.50			●	●				
WNMG080412-TM	1.20	0.15 - 0.25	1.00 - 2.50			○					
WNMG080408-BF	0.80	0.20 - 0.35	0.50 - 2.00								●
WNMG080408-MS	0.80	0.20 - 0.35	0.50 - 2.00							●	
WNMG080408-BM	0.80	0.20 - 0.35	1.00 - 3.00							●	●
WNMG080412-BM	1.20	0.20 - 0.35	1.00 - 3.00							●	●
WNMG080408-MA	0.80	0.20 - 0.50	1.00 - 3.50							●	●
WNMG080412-MA	1.20	0.20 - 0.50	1.00 - 3.50							●	●

● Stock Item ○ Non-Stock Item

CUTTING SPEED											
Cutting Speed			Vc (m/min)								
ISO	MG	Sub-Group	PC3115	PC3215	PC2325	PC2025	PC4025	PC4325	PC4925	PC2125	PC4525
			Min - Max	Min - Max	Min - Max	Min - Max	Min - Max	Min - Max	Min - Max	Min - Max	Min - Max
P	P1 - P3	Low Carbon Steel	-	-	200-250-300	200-220-250	180-200-230	-	-	200-300-300	-
	P4 - P7	Medium -Alloyed Steel	-	-	150-200-250	120-150-250	100-150-180	-	-	150-200-250	-
	P8 - P12	High-Alloyed Steel	-	-	100-150-180	80-120-160	80-120-150	-	-	100-150-180	-
M	M1 - M3	Ferritic & Martensitic Steel	-	-	100-120-180	-	110-130-150	100-150-180	100-120-180	100-120-180	-
	M4 - M5	Austenitic Stainless Steel	-	-	90-120-150	-	70-100-130	80-100-150	90-120-150	90-120-150	-
K	K1 - K4	Grey Cast Iron	250-350-600	150-200-300	150-200-220	-	150-200-220	-	-	150-200-220	-
	K5 - K7	Ductile Iron	200-250-300	100-150-250	100-150-200	-	100-150-200	-	-	100-150-200	-
N	N1 - N11	Non-Ferrous Metals	-	-	-	-	-	-	-	-	-
S	S1 - S3	Titanium Alloys	-	-	-	-	-	30-50-80	40-80-120	-	-
	S11 - S13	Heat-Resistant Alloy	-	-	-	-	-	-	20-40-60	-	-
H	H5 - H21	Hard Materials	-	-	-	-	-	60-100-150	-	-	-

CCMT

	L	IC	S
CC** 0602	6.0	6.35	2.38
CC** 09T3	9.0	9.525	3.97
CC** 1204	12.0	12.7	4.76

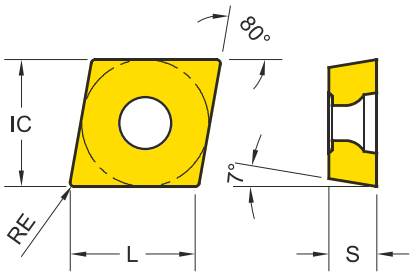

DESIGNATION	RE	Fn (mm/Rev)	Ap (mm)	CVD					PVD		
				PC3115	PC3215	PC2325	PC2025	PC2125	PC4025	PC4325	PC4925
CCMT060204-JW	0.40	0.10 - 0.25	0.30 - 1.50			●		○	○	●	●
CCMT09T304-JW	0.40	0.15 - 0.30	0.50 - 1.50			●		○	●	●	●
CCMT09T308-JW	0.80	0.15 - 0.30	0.50 - 2.00			●			●	●	●
CCMT120408-JW	0.80	0.15 - 0.35	1.00 - 2.50			●			○	○	○
CCMT120412-JW	1.20	0.15 - 0.35	1.00 - 2.50						○	○	○
CCMT060204-MM	0.40	0.05 - 0.20	0.50 - 1.50						●	●	●
CCMT09T304-MM	0.40	0.05 - 0.20	0.50 - 1.50					○	●	●	●
CCMT09T308-MM	0.80	0.05 - 0.25	0.50 - 1.50						●	●	●
CCMT120408-MM	0.80	0.15 - 0.35	0.50 - 2.50						○	○	○
CCMT120412-MM	1.20	0.15 - 0.35	0.50 - 2.50						○	○	○

● Stock Item ○ Non-Stock Item

CUTTING SPEED											
Cutting Speed			Vc (m/min)								
ISO	MG	Sub-Group	PC3115	PC3215	PC2325	PC2025	PC4025	PC4325	PC4925	PC2125	PC4525
			Min - Max	Min - Max	Min - Max	Min - Max	Min - Max	Min - Max	Min - Max	Min - Max	Min - Max
P	P1 - P3	Low Carbon Steel	-	-	200-250-300	200-220-250	180-200-230	-	-	200-300-300	-
	P4 - P7	Medium -Alloyed Steel	-	-	150-200-250	120-150-250	100-150-180	-	-	150-200-250	-
	P8 - P12	High-Alloyed Steel	-	-	100-150-180	80-120-160	80-120-150	-	-	100-150-180	-
M	M1 - M3	Ferritic & Martensitic Steel	-	-	100-120-180	-	110-130-150	100-150-180	100-120-180	100-120-180	-
	M4 - M5	Austenitic Stainless Steel	-	-	90-120-150	-	70-100-130	80-100-150	90-120-150	90-120-150	-
K	K1 - K4	Grey Cast Iron	250-350-600	150-200-300	150-200-220	-	150-200-220	-	-	150-200-220	-
	K5 - K7	Ductile Iron	200-250-300	100-150-250	100-150-200	-	100-150-200	-	-	100-150-200	-
N	N1 - N11	Non-Ferrous Metals	-	-	-	-	-	-	-	-	-
S	S1 - S3	Titanium Alloys	-	-	-	-	-	30-50-80	40-80-120	-	-
	S11 - S13	Heat-Resistant Alloy	-	-	-	-	-	-	20-40-60	-	-
H	H5 - H21	Hard Materials	-	-	-	-	-	60-100-150	-	-	-

DCMT

	L	IC	S
DC** 0702	7.0	6.35	2.38
DC** 11T3	11.0	9.525	3.97

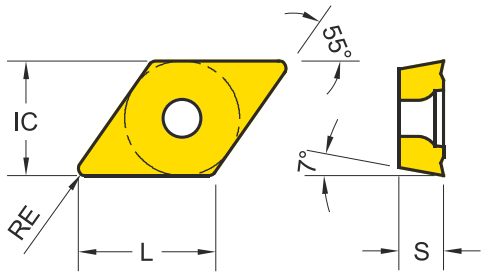

DESIGNATION	RE	Fn (mm/Rev)	Ap (mm)	CVD					PVD		
				PC3115	PC3215	PC2325	PC2025	PC2125	PC4025	PC4325	PC4925
DCMT070204-JW	0.40	0.05 - 0.10	0.30 - 0.80						●	●	●
DCMT11T304-JW	0.40	0.50 - 1.00	0.50 - 1.00			●			●	●	●
DCMT11T308-JW	0.84	0.50 - 1.50	0.50 - 1.50			●		○	○	○	○
DCMT070204-MM	0.84	0.05 - 0.10	0.30 - 0.80			●			●	●	●
DCMT070208-MM	0.80	0.05 - 0.10	0.30 - 0.80						○	○	○
DCMT11T304-MM	0.40	0.50 - 1.00	0.50 - 1.00						●	●	●
DCMT11T308-MM	0.80	0.50 - 1.50	0.50 - 1.50						○	○	○

● Stock Item ○ Non-Stock Item

CUTTING SPEED											
Cutting Speed			Vc (m/min)								
ISO	MG	Sub-Group	PC3115	PC3215	PC2325	PC2025	PC4025	PC4325	PC4925	PC2125	PC4525
			Min - Max	Min - Max	Min - Max	Min - Max	Min - Max	Min - Max	Min - Max	Min - Max	Min - Max
P	P1 - P3	Low Carbon Steel	-	-	200-250-300	200-220-250	180-200-230	-	-	200-300-300	-
	P4 - P7	Medium -Alloyed Steel	-	-	150-200-250	120-150-250	100-150-180	-	-	150-200-250	-
	P8 - P12	High-Alloyed Steel	-	-	100-150-180	80-120-160	80-120-150	-	-	100-150-180	-
M	M1 - M3	Ferritic & Martensitic Steel	-	-	100-120-180	-	110-130-150	100-150-180	100-120-180	100-120-180	-
	M4 - M5	Austenitic Stainless Steel	-	-	90-120-150	-	70-100-130	80-100-150	90-120-150	90-120-150	-
K	K1 - K4	Grey Cast Iron	250-350-600	150-200-300	150-200-220	-	150-200-220	-	-	150-200-220	-
	K5 - K7	Ductile Iron	200-250-300	100-150-250	100-150-200	-	100-150-200	-	-	100-150-200	-
N	N1 - N11	Non-Ferrous Metals	-	-	-	-	-	-	-	-	-
S	S1 - S3	Titanium Alloys	-	-	-	-	-	30-50-80	40-80-120	-	-
	S11 - S13	Heat-Resistant Alloy	-	-	-	-	-	-	20-40-60	-	-
H	H5 - H21	Hard Materials	-	-	-	-	-	60-100-150	-	-	-

TCMT

	L	IC	S
TC** 1102	11.0	6.35	2.38
TC** 16T3	16.0	9.525	3.97

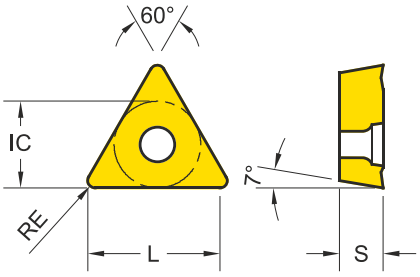

DESIGNATION	RE	Fn (mm/Rev)	Ap (mm)	CVD					PVD		
				PC3115	PC3215	PC2325	PC2025	PC2125	PC4025	PC4325	PC4925
TCMT110204-JW	0.40	0.10 - 0.15	0.30 - 1.00			●			●	●	●
TCMT110208-JW	0.80	0.10 - 0.15	0.30 - 1.00						○	○	○
TCMT16T304-JW	0.40	0.10 - 0.20	0.30 - 1.50			●			○	○	○
TCMT16T308-JW	0.80	0.10 - 0.30	0.50 - 1.50			●		○	○	○	○
TCMT110204-MM	0.84	0.07 - 0.15	0.30 - 1.00						●	●	○
TCMT110208-MM	0.80	0.10 - 0.15	0.30 - 1.00			○			○	○	○
TCMT16T304-MM	0.40	0.10 - 0.15	0.30 - 1.00						○	○	○
TCMT16T308-MM	0.80	0.10 - 0.20	0.50 - 1.50						○	○	○

● Stock Item ○ Non-Stock Item

CUTTING SPEED

Cutting Speed			Vc (m/min)								
ISO	MG	Sub-Group	PC3115	PC3215	PC2325	PC2025	PC4025	PC4325	PC4925	PC2125	PC4525
			Min - Max	Min - Max	Min - Max	Min - Max	Min - Max	Min - Max	Min - Max	Min - Max	Min - Max
P	P1 - P3	Low Carbon Steel	-	-	200-250-300	200-220-250	180-200-230	-	-	200-300-300	-
	P4 - P7	Medium -Alloyed Steel	-	-	150-200-250	120-150-250	100-150-180	-	-	150-200-250	-
	P8 - P12	High-Alloyed Steel	-	-	100-150-180	80-120-160	80-120-150	-	-	100-150-180	-
M	M1 - M3	Ferritic & Martensitic Steel	-	-	100-120-180	-	110-130-150	100-150-180	100-120-180	100-120-180	-
	M4 - M5	Austenitic Stainless Steel	-	-	90-120-150	-	70-100-130	80-100-150	90-120-150	90-120-150	-
K	K1 - K4	Grey Cast Iron	250-350-600	150-200-300	150-200-220	-	150-200-220	-	-	150-200-220	-
	K5 - K7	Ductile Iron	200-250-300	100-150-250	100-150-200	-	100-150-200	-	-	100-150-200	-
N	N1 - N11	Non-Ferrous Metals	-	-	-	-	-	-	-	-	-
S	S1 - S3	Titanium Alloys	-	-	-	-	-	30-50-80	40-80-120	-	-
	S11 - S13	Heat-Resistant Alloy	-	-	-	-	-	-	20-40-60	-	-
H	H5 - H21	Hard Materials	-	-	-	-	-	60-100-150	-	-	-

VBMT

	L	IC	S
VB** 1604	16.0	9.525	4.76

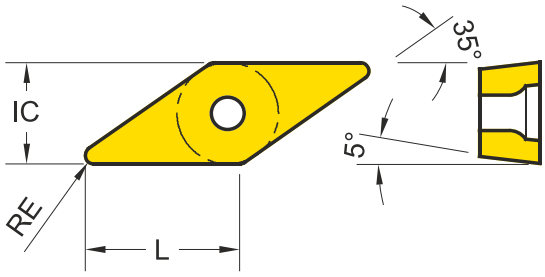

DESIGNATION	RE	Fn (mm/Rev)	Ap (mm)	CVD					PVD		
				PC3115	PC3215	PC2325	PC2025	PC2125	PC4025	PC4325	PC4925
VBMT160404-JW	0.40	0.10 - 0.25	0.30 - 1.00						●	●	
VBMT160404-MM	0.40	0.10 - 0.25	0.30 - 1.00			●				●	
VBMT160408-MM	0.80	0.10 - 0.25	0.30 - 1.00			●				●	

● Stock Item ○ Non-Stock Item

CUTTING SPEED											
Cutting Speed			Vc (m/min)								
ISO	MG	Sub-Group	PC3115	PC3215	PC2325	PC2025	PC4025	PC4325	PC4925	PC2125	PC4525
			Min - Max	Min - Max	Min - Max	Min - Max	Min - Max	Min - Max	Min - Max	Min - Max	Min - Max
P	P1 - P3	Low Carbon Steel	-	-	200-250-300	200-220-250	180-200-230	-	-	200-300-300	-
	P4 - P7	Medium -Alloyed Steel	-	-	150-200-250	120-150-250	100-150-180	-	-	150-200-250	-
	P8 - P12	High-Alloyed Steel	-	-	100-150-180	80-120-160	80-120-150	-	-	100-150-180	-
M	M1 - M3	Ferritic & Martensitic Steel	-	-	100-120-180	-	110-130-150	100-150-180	100-120-180	100-120-180	-
	M4 - M5	Austenitic Stainless Steel	-	-	90-120-150	-	70-100-130	80-100-150	90-120-150	90-120-150	-
K	K1 - K4	Grey Cast Iron	250-350-600	150-200-300	150-200-220	-	150-200-220	-	-	150-200-220	-
	K5 - K7	Ductile Iron	200-250-300	100-150-250	100-150-200	-	100-150-200	-	-	100-150-200	-
N	N1 - N11	Non-Ferrous Metals	-	-	-	-	-	-	-	-	-
S	S1 - S3	Titanium Alloys	-	-	-	-	-	30-50-80	40-80-120	-	-
	S11 - S13	Heat-Resistant Alloy	-	-	-	-	-	-	20-40-60	-	-
H	H5 - H21	Hard Materials	-	-	-	-	-	60-100-150	-	-	-

Turning Product Guidance

Product detail - Inserts Carbide Cutting data

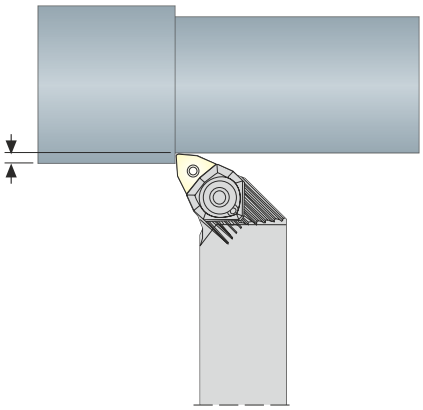

Depth of cut

The maximum depth of cut that can be used depends on a number of factors. Machine power, stability, workpiece material, insert shape and size, nose radius, chipbreaker, grade and cutting edge angle.

Start with the insert size to get an indication and proceed with the recommendations for the chosen chipbreaker. This will give a suitable maximum depth of cut. A rule of thumb could be that the minimum depth of cut should not be smaller than the nose radius.

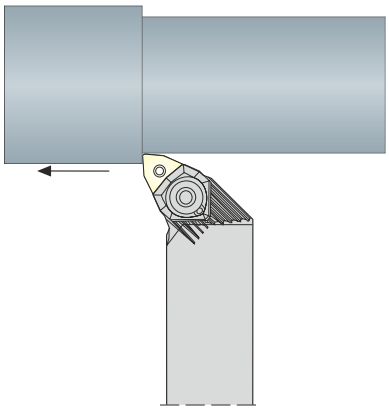

Feed rate

The maximum feed rate that can be used depends on a number of factors. Machine power, stability, workpiece material, insert shape and size, nose radius, chipbreaker, grade and cutting edge angle. Another, very important factor is the required surface finish. Start by looking at the recommendations for the chosen chipbreaker. Then look in the surface finish table below to be sure that the required surface finish can be achieved.

The maximum feed rate should preferably be considerably smaller than the nose radius.

A too low feed rate can result in poor chipbreaking and tool life.

Surface finish

A large nose radius normally produces a better surface finish.
The table gives recommended maximum, theoretical, feed rates to achieve a specified Revalue.
Always consider the possibility to use high feed inserts for turning with high feed with retained surface finish.

Data according to refined estimate R_a equation

Surface finish R_a value (M)	Nose radius, RE mm / inch					
	0.2 / 0.008	0.4 / 0.016	0.8 / 0.032	1.2 / 0.047	1.6 / 0.063	2.4 / 0.094
	Feed rate, f mm / inch / rev					
0,6	0,06 / 0.0023	0,08 / 0.0031	0,12 / 0.0047	0,14 / 0.0055	0,17 / 0.007	0,21 / 0.008
1,6	0,10 / 0.0039	0,14 / 0.0055	0,20 / 0.008	0.24 / 0.009	0,28 / 0.011	0,34 / 0.013
3,2	0,14 / 0.0055	0,20 / 0.008	0,28 / 0.011	0,34 / 0.013	0,39 / 0.015	0,48 / 0.019
6,3	–	0,27 / 10.011	0,39 / 0.015	0,48 / 0.019	0,55 / 0.022	0,68 / 0.027
8,0	–	–	0,44 / 0.017	0,54 / 0.021	0,63/ 0.025	0,77 / 0.030

Turning Product Guidance

Product detail - Inserts Carbide Cutting data

Cutting data - Nomenclature and formula

RPM	$n = \frac{V_c \cdot 1000}{\pi \cdot D_c}$	(rev/min)
Cutting Speed	$V_c = \frac{n \cdot \pi \cdot D_c}{1000}$	(m/min)
Surface Finish (arithmetic average deviation) Rough Estimates)	$R_a = \frac{f^2 \cdot 50}{RE}$	(:m)
	$R_a = \frac{R_t}{3{,}5}$	(:m)
Refined estimate	$R_a \approx 770 \cdot 1 - \left(\frac{\frac{f}{2RE}}{\arcsin\left(\frac{f}{2RE}\right)} \right) \cdot RE(\mu m)$	
	Valid for: $f \leq 2\sqrt{a_p (2RE - a_p)} \geq 2RE$	
Surface Finish (total height of profile estimate)	$R_t = k \cdot \frac{f^2 \cdot 1000}{8 \cdot RE}$	(:m)
Power demand estimate	$P_c = \frac{V_c \cdot f \cdot a_p}{25}$	(kW)
Metal removal rate	$Q = V_c \cdot f \cdot a_p$	(cm^3/min)

a_p	=	Depth of cut	(mm)
DC	=	Workpiece diameter	(mm)
f	=	Feed rate	(mm/rev)
h	=	Chip thickness	(mm)
k	=	Constant 1,0 for steel and strainless steel 1,4 for cast iron	(rev/min)
n	=	RPM	(kW)
P_c	=	Power demand	(cm3/min)
Q	=	Metal removal rate	(:m)
R_a	=	Surface finish (arithmetic average deviation)	(mm)
RE	=	Nose radius	(:m)
R_t	=	Total height of profile surface	(m/min)
v_c	=	Cutting speed	

Turning Product Guidance

Trouble Shooting - Turning problems & recommended solutions

Too long unstable chips (e.g. risks for tangling)

One of the main concerns even for the turning professional is the chip control often concerning chipbreaking.
Here is how to start:

Too long unstable chips (e.g. risks for tangling)

1. Try increasing the feed rate and/or depth of cut,
2. Change to a more suitable tighter chipbreaker.

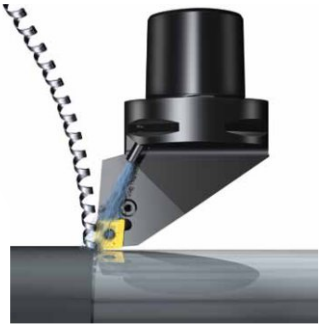

Too hard-curled very short chips (e.g. risks for excess heat)

1. Try lowering the feed rate and/or depth of cut.
2. Change to a more suitable open chipbreaker.

Too much vibrations (e.g. risk marks and breakages)

1. Secure workpiece clamping and tools.
2. Try changing cutting speed and/or feed.
3. Reduce the depth of cut.
4. Select a more easy-cutting chipbreaker.

Poor surface finish (e.g. risk not reaching requirements)

1. Reduce the feed rate.
2. Increase cutting speed.
3. Select a high-feed Wiper insert chipbreaker in accordance to the code key

Turning products Trouble shooting

Insert wear and failure modes

When in need to go in more depth on the topic of wear of coated carbide insert and solve challenges based on wear processes the following collection will provide a comprehensive platform.

Here you will find a more complete list of recommended solution options.

Normal flank wear

The normal flank wear, since it is uniform, predictable and dependable, is the most desirable wear mode.

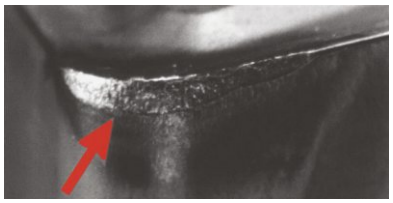

Cause

Abrasive wear. Hard microscopic inclusions often of carbides at workpiece material surface in contact with insert cut into the insert. In some cases fractions of non-contained microscopic hard particles that cannot be retained in a matrix may tumble between surfaces in contact and also cut into the insert. An irregular flank wear that initially may look uniform, as well as too rapid though uniform flank wear, prematurely reaching a set target wear criterion, requires a corrective action in some form.

What to look for
- Relatively uniform abrasion along the cutting edge
- Non-uniform appearance may indicate influence of other wear modes (see other wear descriptions)
  Note: Metal from the workpiece can be smeared over the cutting edge and can exaggerate the apparent size of the wear scar.

When to expect it
- In all materials, an insert will finally fail due to normal flank wear if it doesn't fail from something else first.

Corrective actions (to rapid flank wear)
- Select a more wear resistant, harder, or coated carbide grade
- Reduce the cutting speed (or RPM)
- Apply coolant correctly
- If possible, select insert with larger radius

Crater wear

Cause

A combination of chemical diffusion, decomposition and abrasive wear causes cratering. Classically, the heat from workpiece chips decomposes the tungsten carbide grains in the substrate, and carbon leaches into the chips (diffusion), creating a 'crater' on the top surface or rake face of the insert. The crater will eventually grow large enough to cause the insert to fail e.g. by chipping or rapid flank wear

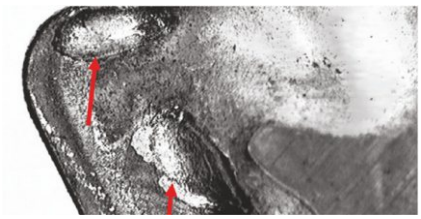

What to look for
- Craters or pits on the top or the rake face of the inserts
- Chipbreaking may change to better or worse after cratering started

When to expect it
- Iron or titanium-based alloys

Corrective actions
- Use wear resistant grades and if needed try another grade with other coating design Or reduce heat by...
- Using coolant
- Using a freer cutting geometry
- Reducing the cutting speed (or RPM)
- Changing feed rate

Turning products Trouble shooting

Built-up edge

Cause

Material adhesion. Built-up edge is a result of the workpiece material being pressure welded to the cutting edge. This could be an indicator of exit conditions from cutting in workpiece materials with high chemical affinity, high cutting forces/pressure, and locally insufficient temperature around the cutting zone. The wear mode itself could in some cases even be beneficial for tool life, but the consequence of built-up edge breaks off and allows chips to bring pieces of the insert with it or acting as an indicator of chipping, notching or other discontinuous wear modes, makes it important.

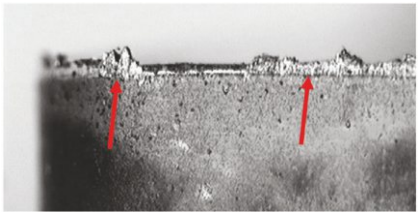

What to look for
- Shiny material on the top or flank of the insert edge
- Erratic changes in part size or surface finish

When to expect it
- High temp alloys and stainless steel and other workpiece materials appearing 'gummy'
- At relatively low speeds especially at limited cuts e.g. facing to center & parting-off and even more apparent in the centre of a drill

Corrective actions
- Change of grade to other coating designs may reduce built-up edge.
- Increase the cutting speed (or RPM) or increase the feed rate
- Try an insert with a sharper cutting edge geometry
- Apply coolant correctly or not at all; perhaps do another check on the emulsion concentration

Chipping

Cause

Mechanical instability or material adhesion. Chipping of the insert edge could be a result of vibrations in the workpiece or spindle. Larger hard inclusions in the material being cut and interrupted cuts may result in local stress concentrations that can cause chipping. In addition adhered material may cause a tensile stress that on removal can tear off parts of an insert.

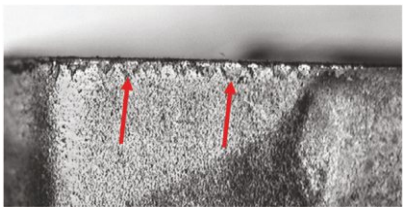

What to look for
- Chipping along the edge of the insert

When to expect it
- Non-rigid set-ups (bad bearings, worn spindles, etc.)
- Demanding entrance and exit conditions
- Hard spots at well as soft spots in work materials
- Powder Metallurgically (PM) made materials

Corrective actions
- Ensure rigid machine tool setup
- Change over to tougher insert grade or stronger cutting edge geometry
- Reduce the feed rate
- In some cases, turn-off the coolant
- See also corrective actions for built-up edge

Turning products Trouble shooting

Thermomechanical failure

Cause

A combination of thermal cycling (frequency changing the working temperature for the insert rapidly), thermal load (amount of heat), thermal shock (fast temperature change from warm to cold and the other way around in different zones), and mechanical shock (stress change from release to full load) causes thermo mechanical failure. Stress cracks form along the insert edge, eventually causing sections of carbide to pull out and appear to be chipping. Seen most commonly in milling.

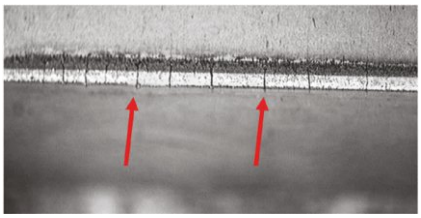

What to look for
- Multiple cracks perpendicular to cutting edge
- Irregular chipping on edges or wear spots on rake face

When to expect it
- Intermittent cuts e.g. facing over slots, but also tool paths when machining a large number of parts creating the thermal cycling or intermittence in coolant flow

Corrective Actions
- Apply coolant differently or not at all
- Select a tougher grade
- Reduce the cutting speed (or RPM) or reducing the feed rate
- Use a free-cutting geometry or chipbreaker to reduce heat

Edge deformation

Cause

Thermal overloading. Excessive heat causes the carbide binder (cobalt) to soften. It could come in combination with mechanical overloading where the pressure of the insert against the workpiece all in all making an insert edge deform partly or fully, eventually breaking off or leading to irregular flank wear.

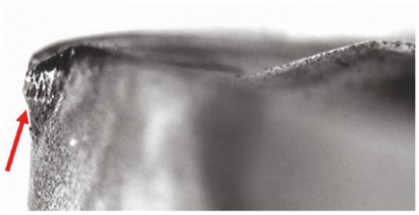

What to look for
- Deformation at the cutting edge or excessive irregular flank wear
- The dimensions of the workpiece may change drastically

When to expect it
- High speed and/or high feed rates
- Hard steels or work-hardened surfaces
- High temperature superalloys or stainless steels

Corrective actions
- Apply coolant correctly
- Try a harder, more wear resistant grade
- Reduce cutting speed (or RPM) or reduce the feed rate
- Select an insert with other geometric features

Turning products Trouble shooting

Notching

Cause

Combinations of local properties in workpiece materials and cutting conditions. Notching is often caused by the conditions at the surface of the workpiece e.g. surface hardening from previous cuts, forged or cast surfaces, or surface scale. This causes the insert to wear more rapidly in that part of the cutting zone. Local stress concentration can also lead to notching as a result of the compressive stress along the cutting edge and lack of the same behind the cutting edge - the insert is particularly affected at the depth of cut.

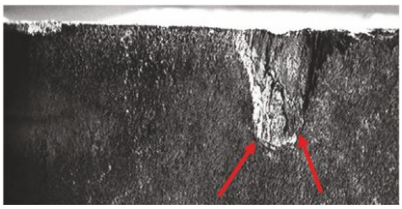

What to look for
- Notching or clusters of chippings for example at the depth of cut area on the insert
  Note: The notch could be of two kinds; the smoother which indicate more chemical/abrasive interaction or the irregular more mechanical/adhesive extensive chipping.

When to expect it
- Materials with surface scale or oxidation
- Work hardening materials
- Cast or other process affected surfaces

Corrective actions
- Vary the depth of cut
- Adjust the feed rate or increase cutting speed (Note: This will generate more flank wear)
- Select a tougher insert grade
- Exchange chipbreaker design drastically
- Prevent built-up edge

Mechanical fracture

Cause

Excessive load (also caused by other wear modes than finally) can cause mechanical fracture. Mechanical overload could of course cause the insert to break from the first moments in a cut to the exit or even after the release from cut. To be considered are also surrounding cutting conditions such as the conditions of the shim, workpiece clamping or machine condition.

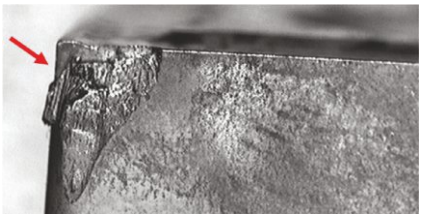

What to look for
- Fracture of insert (e.g appearing as irregular flank wear often at the insert radius)
- Sudden increase of cutting force level

When to expect it
- Inhomogeneous workpieces e.g. with major inclusions, pores or design features that cause heavy impact or load release
- Unstable cutting conditions
- Low cutting data especially cutting speed

Corrective actions
- Reduce the feed rate or the depth of cut
- Increase speed
- Verify set-up rigidity
- Select a tougher insert grade or a more secure insert or cutting edge
- If possible reduce workpiece's inclusions and difficult geometrical features

prothread

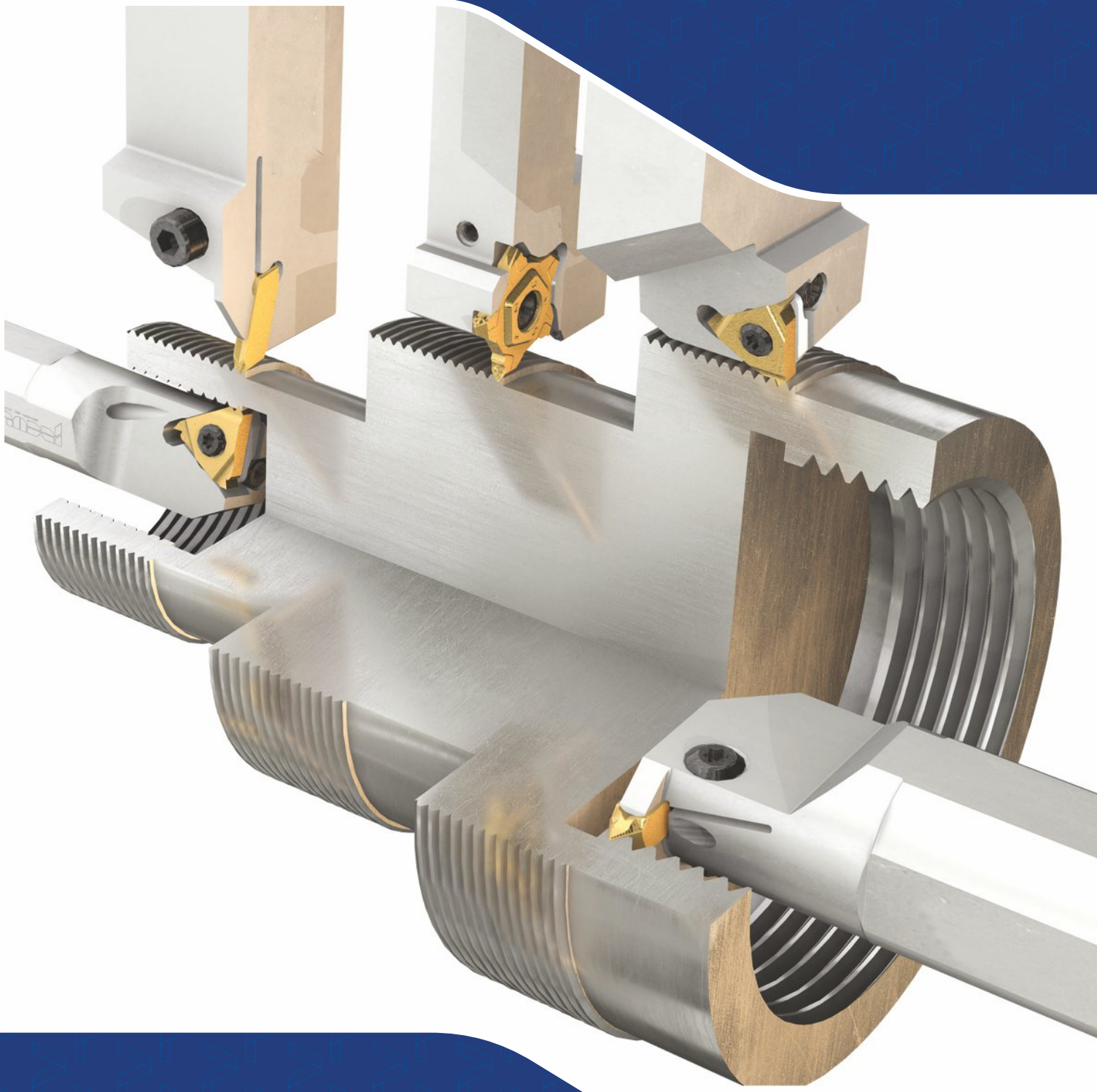

Threading Insert Identification System

Insert Size

L(mm)	D
06	5/32"
08	3/16"
11	1/4"
16	3/8"
22	1/2"
27	5/8"

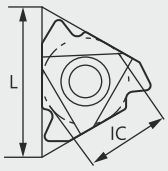

Type of Insert

E	External
N	Internal

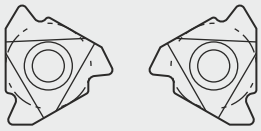

E N

Right Insert(see picture)

RH/LH Insert

R	Right Hand Insert
L	Left Hand Insert

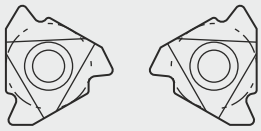

R L

External Insert(see picture)

16 E R A 60

Pitch

Full Profile Pitch Range

mm	TPI
0.5-6	48-4

Partial Profile Pitch Range

	mm	TPI
A	0.5-1.5	48-16
AG	0.5-3.0	48-8
G	1.75-3.0	14-8
N	3.5-5.0	7-5
Q	5.5-6.0	4.5-4
V	6.0-10	4-2.5

Standard

60	60° Partial Profile 60°
55	55° Partial Profile 55°
ISO	ISO ISO Metric
UN	60° American UN
UNJ	60° Aviation thread
W	55° Whitworth for BSW BSP
NPT	60° NPT
NPTF	60° NPTF
BSPT	55° British Standard Pipe Thread
ACME	American ACME
STACME	American Stub ACME
TR	Trapeze DIN 103
ABUT	American Buttress
RD	Round DIN 405
RD20400	Round DIN 20400
APIRD	API Round Casing & Tubing
BUT	API Butress Casing

Partial Profile 60° Threading Inserts

EXTERNAL

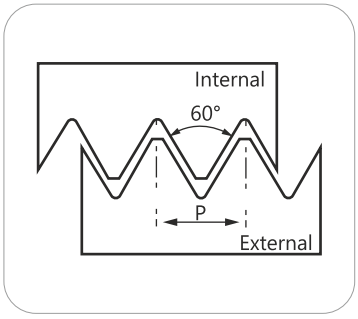

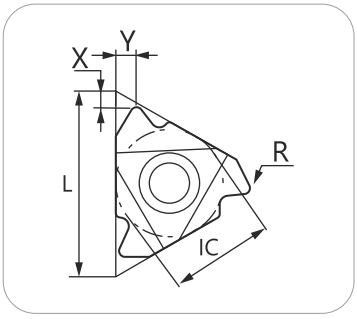

Type Right Hand	Type Left Hand	Pitch		Insert Size		Dimensions			P	M	K	N
		mm	TPI	IC	L/inch	R	X	Y		PT2330		
11ERA60	11ELA60	0.5-1.5	48-16	1/4"	0.43	0.002	0.029	0.035		○		
16ERA60	16ELA60	0.5-1.5	48-16			0.002	0.031	0.035		○		
16ERAG60	16ELAG60	0.5-3.0	48-8	3/8"	0.63	0.003	0.047	0.067		●		
16ERG60	16ELG60	1.75-3.0	18-8			0.011	0.047	0.067		○		
22ERN60	22ELN60	3.5-5.0	7-5	1/2"	0.87	0.021	0.067	0.098		○		
27ERQ60	27ELQ60	5.5-6.0	4.5-4	5/8"	1.06	0.27				○		

● Stock Item ○ Non-Stock Item

Partial Profile 60° Threading Inserts

INTERNAL

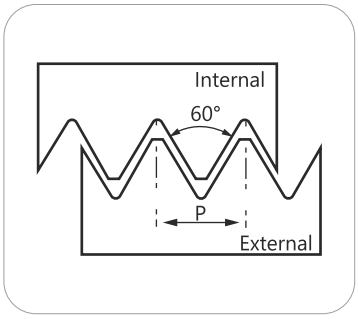

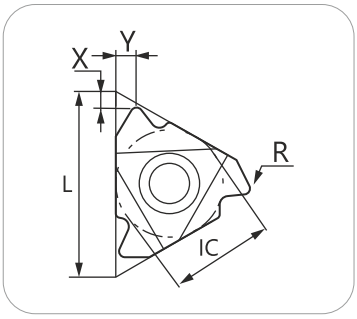

Type Right Hand	Type Left Hand	Pitch		Insert Size		Dimensions			P	M	K	N
		mm	TPI	IC	L/inch	R	X	Y		PT2330		
06NRA60	06NLA60	0.15-1.5	48-16	5/32”	0.271	0.002	0.03	0.03		○		
08NRA60	08NLA60	0.5-1.5	48-16	3/16”	0.325	0.002	0.03	0.03		○		
11NRA60	11NLA60	0.5-1.5	48-16	1/4"	0.43	0.002	0.031	0.031		○		
16NRA60	16NLA60	0.5-1.5	48-16			0.002	0.031	0.031		○		
16NRAG60	16NLAG60	0.5-3.0	48-8	3/8"	0.63	0.003	0.047	0.047		●		
16NRG60	16NLG60	1.75-3.0	18-8			0.008	0.047	0.047		○		
22NRN60	22NLN60	3.5-5.0	7-5	1/2"	0.87	0.018	0.067	0.067		○		
27NRQ60	27NLQ60	5.5-6.0	4.5-4	5/8”	1.06	0.24				○		

● Stock Item ○ Non-Stock Item

A
PROTURN
B
PROTHREAD
C
PROMILL
D
PROSOLID

Partial Profile 55° Threading Inserts

EXTERNAL

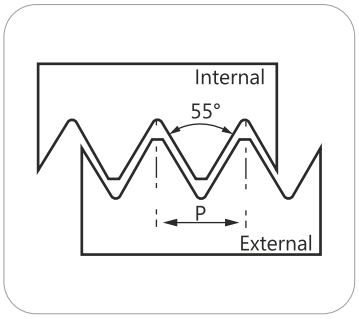

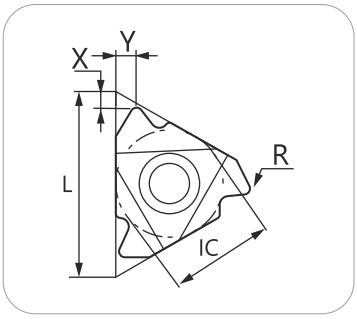

Type Right Hand	Type Left Hand	Pitch		Insert Size		Dimensions			P	M	K	N
		mm	TPI	IC	L/inch	R	X	Y		PT2330		
11ERA55	11ELA55	0.5-1.5	48-16	1/4"	0.43	0.003	0.031	0.035		○		
16ERA55	16ELA55	0.5-1.5	48-16			0.003	0.031	0.035		○		
16ERAG55	16ELAG55	0.5-3.0	48-8	3/8"	0.63	0.004	0.047	0.067		●		
16ERG55	16ELG55	1.75-3.0	18-8			0.011	0.047	0.067		○		
22ERN55	22ELN55	3.5-5.0	7-5	1/2”	0.87	0.021	0.067	0.098		○		
27ERQ55	27ELQ55	5.5-6.0	4.5-4	5/8”	1.06	0.27				○		

● Stock Item ○ Non-Stock Item

Partial Profile 55° Threading Inserts

INTERNAL

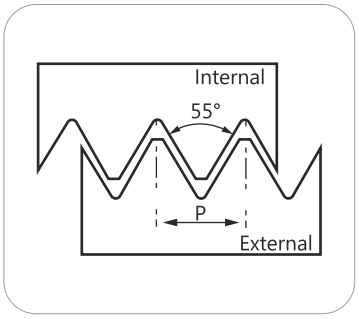

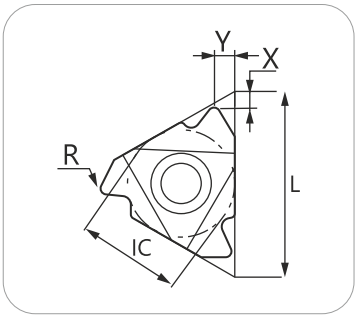

Type Right Hand	Type Left Hand	Pitch		Insert Size		Dimensions			P	M	K	N
		mm	TPI	IC	L/inch	R	X	Y		PT2330		
06NRA55	06NLA55	0.15-1.5	48-16	5/32"	0.271	0.002	0.03	0.031		○		
08NRA55	08NLA55	0.5-1.5	48-16	3/16"	0.325	0.002	0.03	0.031		○		
11NRA55	11NLA55	0.5-1.5	48-16	1/4"	0.43	0.002	0.031	0.035		○		
16NRA55	16NLA55	0.5-1.5	48-16			0.002	0.031	0.035		○		
16NRAG55	16NLAG55	0.5-3.0	48-8	3/8"	0.63	0.003	0.047	0.067		●		
16NRG55	16NLG55	1.75-3.0	18-8			0.008	0.047	0.067		○		
22NRN55	22NLN55	3.5-6.0	7-5	1/2"	0.87	0.018	0.067	0.098		○		
27NRQ55	27NLQ55	5.5-6.0	4.5-4	5/8"	1.06	0.24				○		

● Stock Item ○ Non-Stock Item

ISO Metric

EXTERNAL

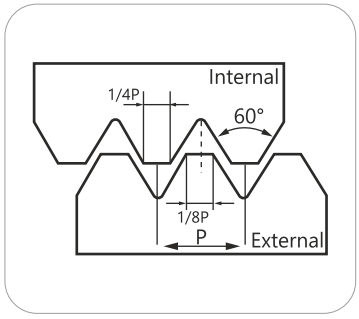

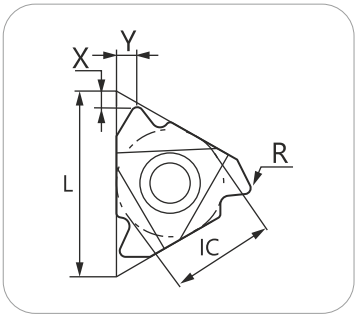

Type Right Hand	Type Left Hand	Pitch		Insert Size		Dimensions			P	M	K	N
		mm	TPI	IC	L/inch	R	X	Y		PT2330		
11ER0.50 ISO	11EL0.50 ISO	0.5		1.4"	0.43	0.002	0.024	0.016		○		
11ER0.75 ISO	11EL0.75 ISO	0.75		1.4"	0.43	0.003	0.024	0.024		○		
11ER1.00 ISO	11EL1.00 ISO	1		1.4"	0.43	0.004	0.027	0.027		○		
11ER1.25 ISO	11EL1.25 ISO	1.25		1.4"	0.43	0.005	0.031	0.035		○		
11ER1.50 ISO	11EL1.50 ISO	1.5		1.4"	0.43	0.007	0.031	0.039		○		
11ER1.75 ISO	11EL1.75 ISO	1.75		1.4"	0.43	0.009	0.035	0.047		○		
11ER2.00 ISO	11EL2.00 ISO	2		1.4"	0.43	0.01	0.039	0.051		○		
16ER0.50 ISO	16EL0.50 ISO	0.5		3/8"	0.63	0.002	0.024	0.016		○		
16ER0.75 ISO	16EL0.75 ISO	0.75		3/8"	0.63	0.003	0.024	0.024		○		
16ER1.00 ISO	16EL1.00 ISO	1		3/8"	0.63	0.004	0.027	0.027		●		
16ER1.25 ISO	16EL1.25 ISO	1.25		3/8”	0.63	0.005	0.031	0.035		●		
16ER1.50 ISO	16EL1.50 ISO	1.5		3/8"	0.63	0.007	0.031	0.039		●		
16ER1.75 ISO	16EL1.75 ISO	1.75		3/8"	0.63	0.009	0.035	0.047		●		
16ER2.00 ISO	16EL2.00 ISO	2		3/8"	0.63	0.01	0.039	0.051		●		
16ER2.50 ISO	16EL2.50 ISO	2.5		3/8"	0.63	0.012	0.043	0.059		●		
16ER3.00 ISO	16EL3.00 ISO	3		3/8"	0.63	0.014	0.047	0.063		●		
16ER3.50 ISO	16EL3.50 ISO	3.5		3/8"	0.63	0.015	0.047	0.063		○		
22ER3.00 ISO	22EL3.00 ISO	3		1/2"	0.87	0.014	0.047	0.063		○		
22ER3.50 ISO	22EL3.50 ISO	3.5		1/2"	0.87	0.015	0.063	0.09		○		
22ER4.00 ISO	22EL4.00 ISO	4		1/2”	0.87	0.015	0.063	0.09		○		
22ER4.50 ISO	22EL4.50 ISO	4.5		1/2"	0.87	0.016	0.067	0.094		○		
22ER5.00 ISO	22EL5.00 ISO	5		1/2"	0.87	0.016	0.067	0.098		○		
22ER5.50 ISO	22EL5.50 ISO	5.5		1/2"	0.87	0.016	0.067	0.098		○		
22ER6.00 ISO	22ER6.00 ISO	6		1/2"	0.87	0.02	0.067	0.098		○		
27ER5.50 ISO	27EL5.50 ISO	5.5		5/8"	1.06	0.016				○		
27ER6.00 ISO	27ER6.00 ISO	6		5/8"	1.06	0.02				○		
27VER6.00 ISO	27VEL6.00 ISO	6		5/8"	1.06	0.02				○		
27VER8.00 ISO	27VEL8.00 ISO	8		5/8"	1.06	0.045				○		
27VER10.0 ISO	27VEL10.0 ISO	10		5/8"	1.06	0.056				○		

● Stock Item ○ Non-Stock Item

ISO Metric

INTERNAL

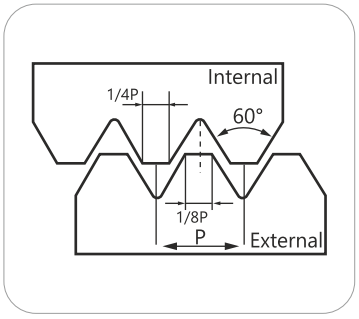

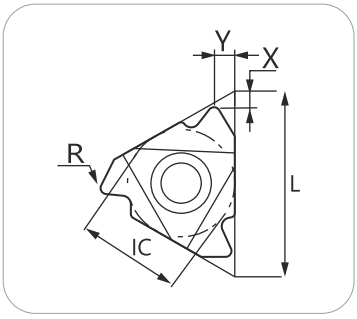

Type Right Hand	Type Left Hand	Pitch		Insert Size		Dimensions			P	M	K	N
		mm	TPI	IC	L/inch	R	X	Y		PT2330		
11NR0.50 ISO	11NL0.50 ISO	0.5		1.4"	0.43	0.002	0.024	0.016		○		
11NR0.75 ISO	11NL0.75 ISO	0.75		1.4"	0.43	0.003	0.024	0.024		○		
11NR1.00 ISO	11NL1.00 ISO	1		1.4"	0.43	0.004	0.024	0.027		○		
11NR1.25 ISO	11NL1.25 ISO	1.25		1.4"	0.43	0.005	0.031	0.035		○		
11NR1.50 ISO	11NL1.50 ISO	1.5		1.4"	0.43	0.006	0.031	0.039		○		
11NR1.75 ISO	11NL1.75 ISO	1.75		1.4"	0.43	0.007	0.035	0.047		○		
11ER2.00 ISO	11NL2.00 ISO	2		1.4"	0.43	0.009	0.039	0.051		○		
16NR0.50 ISO	16NL0.50 ISO	0.5		3/8"	0.63	0.002	0.024	0.016		○		
16NR0.75 ISO	16NL0.75 ISO	0.75		3/8”	0.63	0.003	0.024	0.024		○		
16NR1.00 ISO	16NL1.00 ISO	1		3/8"	0.63	0.004	0.024	0.027		●		
16NR1.25 ISO	16NL1.25 ISO	1.25		3/8"	0.63	0.005	0.031	0.035		●		
16NR1.50 ISO	16NL1.50 ISO	1.5		3/8"	0.63	0.006	0.031	0.039		●		
16NR1.75 ISO	16EL1.75 ISO	1.75		3/8"	0.63	0.007	0.035	0.047		●		
16NR2.00 ISO	16NL2.00 ISO	2		3/8"	0.63	0.009	0.039	0.051		●		
16NR2.50 ISO	16NL2.50 ISO	2.5		3/8"	0.63	0.011	0.043	0.059		○		
16NR3.00 ISO	16NL3.00 ISO	3		3/8"	0.63	0.012	0.043	0.059		○		
16NR3.50 ISO	16NL3.50 ISO	3.5		3/8"	0.63	0.014	0.043	0.059		○		
22NR3.00 ISO	22NL3.00 ISO	3		1/2"	0.87	0.012	0.043	0.059		○		
22NR3.50 ISO	22NL3.50 ISO	3.5		1/2"	0.87	0.014	0.063	0.09		○		
22NR4.00 ISO	22NL4.00 ISO	4		1/2"	0.87	0.015	0.063	0.09		○		
22NR4.50 ISO	22NL4.50 ISO	4.5		1/2"	0.87	0.015	0.063	0.094		○		
22NR5.00 ISO	22NL5.00 ISO	5		1/2"	0.87	0.016	0.063	0.094		○		
22NR5.50 ISO	22NL5.50 ISO	5.5		1/2"	0.87	0.016	0.063	0.094		○		
22NR6.00 ISO	22NR6.00 ISO	6		1/2"	0.87	0.018	0.063	0.094		○		
27NR5.50 ISO	27NL5.50 ISO	5.5		5/8"	1.06	0.016				○		
27NR6.00 ISO	27NR6.00 ISO	6		5/8"	1.06	0.02				○		
27VNR6.00 ISO	27VNL6.00 ISO	6		5/8"	1.06	0.02				○		
27VNR8.00 ISO	27VNL8.00 ISO	8		5/8"	1.06	0.045				○		
27VNR10.0 ISO	27VNL10.0 ISO	10		5/8"	1.06	0.056				○		

● Stock Item ○ Non-Stock Item

UN-60°

60° American UN UNC UNF UNEF UNS

EXTERNAL

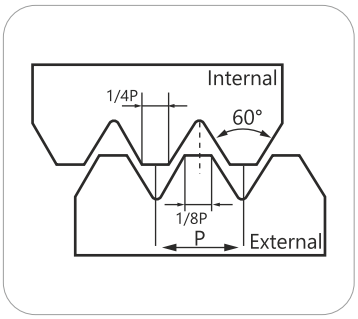

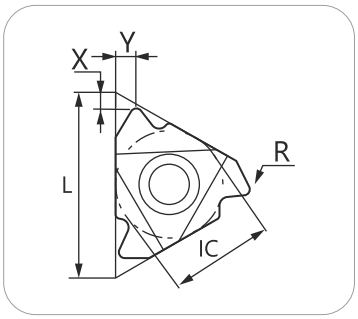

Type Right Hand	Type Left Hand	Pitch		Insert Size		Dimensions			P	M	K	N
		mm	TPI	IC	L/inch	R	X	Y		PT2330		
11ER32UN	11EL32UN	0.794	32	1/4"	0.43	0.003	0.024	0.024		○		
11ER28UN	11EL28UN	0.907	28	1/4"	0.43	0.003	0.024	0.027		○		
11ER24UN	11EL24UN	1.058	24	1/4"	0.43	0.004	0.027	0.031		○		
11ER20UN	11NL20UN	1.27	20	1/4"	0.43	0.004	0.031	0.035		○		
11ER18UN	11EL18UN	1.411	18	1/4"	0.43	0.005	0.035	0.039		○		
11ER16UN	11EL16UN	1.588	16	1/4"	0.43	0.006	0.039	0.043		○		
11ER14UN	11EL14UN	1.814	14	1/4"	0.43	0.007	0.043	0.047		○		
11ER12UN	11EL12UN	2.117	12	1/4"	0.43	0.008	0.043	0.55		○		
16ER32UN	16EL32UN	0.794	32	3/8"	0.63	0.003	0.024	0.024		○		
16ER28UN	16EL28UN	0.907	28	3/8"	0.63	0.003	0.024	0.027		○		
16ER24UN	16EL24UN	1.058	24	3/8"	0.63	0.004	0.027	0.031		○		
16ER20UN	16EL20UN	1.27	20	3/8"	0.63	0.004	0.031	0.035		○		
16ER18UN	16EL18UN	1.411	18	3/8"	0.63	0.005	0.035	0.039		○		
16ER16UN	16EL16UN	1.588	16	3/8"	0.63	0.006	0.039	0.043		○		
16ER14UN	16EL14UN	1.814	14	3/8"	0.63	0.007	0.043	0.047		○		
16ER12UN	16EL12UN	2.117	12	3/8"	0.63	0.008	0.043	0.55		○		
16ER11UN	16EL11UN	2.309	11	3/8"	0.63	0.01	0.043	0.055		○		
16ER10UN	16EL10UN	2.54	10	3/8"	0.63	0.012	0.043	0.059		○		
16ER9UN	16EL9UN	2.822	9	3/8"	0.63	0.013	0.047	0.059		○		
16ER8UN	16EL8UN	3.175	8	3/8"	0.63	0.013	0.047	0.063		○		
22ER7UN	22EL7UN	3.629	7	1/2"	0.87	0.014	0.047	0.063		○		
22ER6UN	22EL6UN	4.233	6	1/2"	0.87	0.015	0.047	0.063		○		
22ER5UN	22EL5UN	5.08	5	1/2"	0.87	0.016	0.057	0.073		○		
22ER4.5UN	22EL4.5UN	5.644	4.5	1/2"	0.87	0.017	0.057	0.073		○		
22ER4UN	22EL4UN	6.35	4	1/2"	0.87	0.02	0.057	0.073		○		
27ER4.5UN	27EL4.5UN	5.644	4.5	5/8"	1.06	0.017				○		
27ER4UN	27EL4UN	6.35	4	5/8"	1.06	0.02				○		
27VER4UN	27VEL4UN	6.35	4	5/8"	1.06	0.02				○		
27VER3UN	27VEL3UN	8.466	3	5/8"	1.06	0.048				○		

● Stock Item ○ Non-Stock Item

UN-60°

60° American UN UNC UNF UNEF UNS

INTERNAL

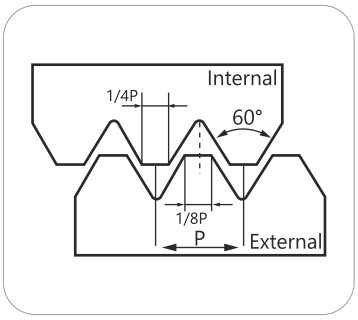

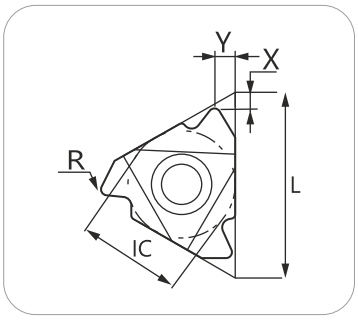

Type Right Hand	Type Left Hand	Pitch		Insert Size		Dimensions			P	M	K	N
		mm	TPI	IC	L/inch	R	X	Y		PT2330		
11NR32UN	11NL32UN	0.794	32	1/4"	0.43	0.003	0.024	0.024		○		
11NR28UN	11NL28UN	0.907	28	1/4"	0.43	0.003	0.024	0.024		○		
11NR24UN	11NL24UN	1.058	24	1/4"	0.43	0.003	0.027	0.031		○		
11NR20UN	11NL20UN	1.27	20	1/4"	0.43	0.004	0.031	0.035		○		
11NR18UN	11NL18UN	1.411	18	1/4"	0.43	0.006	0.031	0.039		○		
11NR16UN	11NL16UN	1.588	16	1/4"	0.43	0.008	0.035	0.043		○		
11NR14UN	11NL14UN	1.814	14	1/4"	0.43	0.009	0.035	0.047		○		
11NR12UN	11NL12UN	2.117	12	1/4”	0.43	0.01	0.043	0.55		○		
16NR32UN	16NL32UN	0.794	32	3/8"	0.63	0.003	0.024	0.024		○		
16NR28UN	16NL28UN	0.907	28	3/8"	0.63	0.003	0.024	0.024		○		
16NR24UN	16NL24UN	1.058	24	3/8"	0.63	0.003	0.027	0.031		○		
16NR20UN	16NL20UN	1.27	20	3/8"	0.63	0.004	0.031	0.035		○		
16NR18UN	16NL18UN	1.411	18	3/8"	0.63	0.005	0.031	0.039		○		
16NR16UN	16NL16UN	1.588	16	3/8"	0.63	0.006	0.035	0.043		○		
16NR14UN	16NL14UN	1.814	14	3/8"	0.63	0.007	0.035	0.047		○		
16NR12UN	16NL12UN	2.117	12	3/8"	0.63	0.007	0.043	0.55		○		
16NR11UN	16NL11UN	2.309	11	3/8"	0.63	0.009	0.043	0.055		○		
16NR10UN	16NL10UN	2.54	10	3/8"	0.63	0.011	0.043	0.059		○		
16NR9UN	16NL9UN	2.822	9	3/8"	0.63	0.011	0.043	0.059		○		
16NR8UN	16NL8UN	3.175	8	3/8"	0.63	0.012	0.043	0.059		○		
22NR7UN	22NL7UN	3.629	7	1/2"	0.87	0.014	0.047	0.065		○		
22NR6UN	22NL6UN	4.233	6	1/2"	0.87	0.014	0.047	0.065		○		
22NR5UN	22NL5UN	5.08	5	1/2"	0.87	0.015	0.057	0.072		○		
22NR4.5UN	22NL4.5UN	5.644	4.5	1/2"	0.87	0.016	0.057	0.072		○		
22NR4UN	22NL4UN	6.35	4	1/2"	0.87	0.017	0.057	0.072		○		
27NR4.5UN	27NL4.5UN	5.644	4.5	5/8"	1.06	0.017				○		
27NR4UN	27NL4UN	6.35	4	5/8"	1.06	0.02				○		
27VNR4UN	27VNL4UN	6.35	4	5/8"	1.06	0.02				○		
27VNR3UN	27VNL3UN	8.466	3	5/8”	1.06	0.046				○		

● Stock Item ○ Non-Stock Item

60°NPT

EXTERNAL

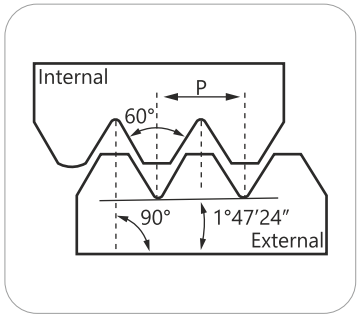

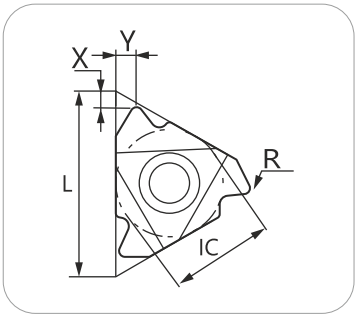

Type Right Hand	Type Left Hand	Pitch		Insert Size		Dimensions			P	M	K	N
		mm	TPI	IC	L/inch	R	X	Y		PT2330		
11ER27NPT	11EL27NPT	0.941	27	1/4"	0.43	0.003	0.031	0.027		○		
11ER18NPT	11EL18NPT	1.411	18	1/4"	0.43	0.004	0.039	0.031		○		
11ER14NPT	11EL14NPT	1.814	14	1/4"	0.43	0.006	0.047	0.035		○		
16ER27NPT	16EL27NPT	0.941	27	1/4"	0.43	0.003	0.031	0.027		○		
18ER18NPT	18EL18NPT	1.411	18	3/8"	0.63	0.004	0.039	0.031		○		
16ER14NPT	16EL14NPT	1.814	14	3/8"	0.63	0.006	0.047	0.035		○		
16ER11.5NPT	16EL11.5NPT	2.209	11.5	3/8"	0.63	0.008	0.059	0.043		○		
16ER8NPT	16EL8NPT	3.175	8	3/8"	0.63	0.01	0.071	0.051		○		

● Stock Item ○ Non-Stock Item

60°NPT

INTERNAL

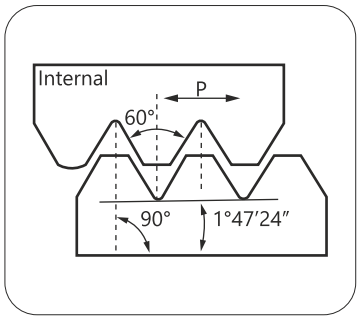

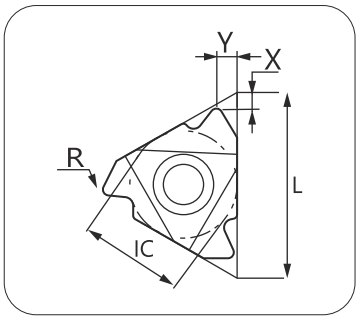

Type Right Hand	Type Left Hand	Pitch		Insert Size		Dimensions			P	M	K	N
		mm	TPI	IC	L/inch	R	X	Y		PT2330		
11NR27NPT	11NL27NPT	0.941	27	1/4"	0.43	0.003	0.039	0.031		○		
11NR18NPT	11NL18NPT	1.411	18	1/4"	0.43	0.004	0.039	0.031		○		
11NR14NPT	11NL14NPT	1.814	14	1/4"	0.43	0.006	0.039	0.031		○		
16NR27NPT	16NL27NPT	0.941	27	1/4"	0.43	0.003	0.039	0.031		○		
18NR18NPT	18NL18NPT	1.411	18	3/8"	0.63	0.004	0.039	0.031		○		
16NR14NPT	16NL14NPT	1.814	14	3/8"	0.63	0.005	0.039	0.031		○		
16NR11.5NPT	16NL11.5NPT	2.209	11.5	3/8"	0.63	0.007	0.052	0.049		○		
16NR8NPT	16NL8NPT	3.175	8	3/8"	0.63	0.009	0.071	0.051		○		

● Stock Item ○ Non-Stock Item

W-55°

55° Whitworth Full Profile

EXTERNAL

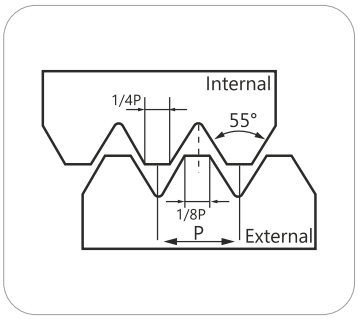

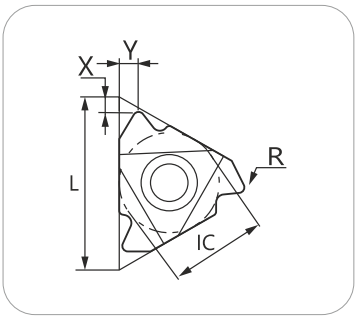

Type Right Hand	Type Left Hand	Pitch		Insert Size		Dimensions			P	M	K	N
		mm	TPI	IC	L/inch	R	X	Y		PT2330		
11ER28W	11EL28W	0.907	28	1/4"	0.43	0.003	0.024	0.027		○		
11ER26W	11EL26W	0.977	26	1/4"	0.43	0.003	0.024	0.027		○		
11ER24W	11EL24W	1.058	24	1/4"	0.43	0.003	0.024	0.027		○		
11ER20W	11EL20W	1.27	20	1/4"	0.43	0.004	0.031	0.035		○		
11ER19W	11EL19W	1.377	19	1/4"	0.43	0.006	0.031	0.039		○		
11ER18W	11EL18W	1.411	18	1/4"	0.43	0.008	0.031	0.039		○		
11ER16W	11EL16W	1.588	16	1/4"	0.43	0.009	0.035	0.043		○		
11ER14W	11EL14W	1.814	14	1/4"	0.43	0.01	0.039	0.047		○		
16ER28W	16EL28W	0.907	13	3/8"	0.63	0.003	0.024	0.027		○		
16ER26W	16EL26W	0.977	26	3/8"	0.63	0.003	0.024	0.027		○		
16ER24W	16EL24W	1.058	24	3/8"	0.63	0.003	0.024	0.027		○		
16ER20W	16EL20W	1.27	20	3/8"	0.63	0.004	0.031	0.035		○		
16ER19W	16EL19W	1.337	19	3/8"	0.63	0.006	0.031	0.039		○		
16ER18W	16EL18W	1.411	18	3/8"	0.63	0.008	0.031	0.039		○		
16ER16W	16EL16W	1.588	16	3/8"	0.63	0.009	0.035	0.043		○		
16ER14W	16EL14W	1.814	14	3/8"	0.63	0.01	0.039	0.047		○		
16ER12W	16EL12W	2.117	12	3/8"	0.63	0.011	0.043	0.055		○		
16ER11W	16EL11W	2.309	11	3/8"	0.63	0.012	0.043	0.059		○		
16ER10W	16EL10W	2.54	10	3/8"	0.63	0.013	0.043	0.059		○		
16ER9W	16EL9W	2.822	9	3/8"	0.63	0.014	0.047	0.067		○		
16ER8W	16EL8W	3.175	8	3/8"	0.63	0.014	0.047	0.059		○		
16ER7W	16EL7W	3.629	7	3/8"	0.63	0.014	0.047	0.059		○		
22ER7W	22EL7W	3.629	7	1/2"	0.87	0.015	0.063	0.088		○		
22ER6W	22EL6W	4.233	6	1/2"	0.87	0.016	0.063	0.088		○		
22ER5W	22EL5W	5.08	5	1/2"	0.87	0.016	0.063	0.088		○		
22ER4.5W	22EL4.5W	5.644	4.5	1/2"	1.06	0.017	0.071	0.091		○		
22ER4W	22EL4W	6.35	4	1/2"	1.06	0.02	0.071	0.091		○		
27ER4.5W	27EL4.5W	5.644	4.5	5/8"	1.06	0.017				○		
27ER4W	27EL4W	6.35	4	5/8"	1.06	0.02				○		
27VER4W	27VEL4W	6.35	4	5/8"	1.06	0.02				○		
27VER3W	27VEL3W	8.466	3	5/8"	1.06	0.048				○		
27VER2.5W	27VEL2.5W	10.16	2.5	5/8"	1.06	0.056				○		

● Stock Item ○ Non-Stock Item

W-55°

55° Whitworth Full Profile

INTERNAL

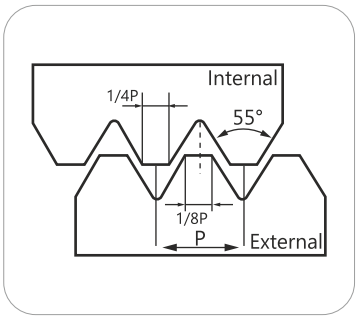

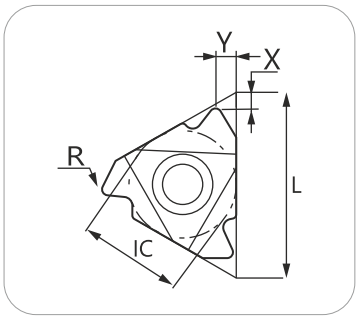

Type Right Hand	Type Left Hand	Pitch		Insert Size		Dimensions			P	M	K	N
		mm	TPI	IC	L/inch	R	X	Y		PT2330		
11NR28W	11NL28W	0.907	28	1/4"	0.43	0.003	0.031	0.038		○		
11NR26W	11NL26W	0.977	26	1/4"	0.43	0.003	0.031	0.035		○		
11NR24W	11NL24W	1.058	24	1/4"	0.43	0.003	0.031	0.035		○		
11NR20W	11NL20W	1.27	20	1/4"	0.43	0.004	0.031	0.035		○		
11NR19W	11NL19W	1.377	19	1/4"	0.43	0.006	0.031	0.035		○		
11NR18W	11NL18W	1.411	18	1/4"	0.43	0.007	0.031	0.035		○		
11NR16W	11NL16W	1.588	16	1/4"	0.43	0.008	0.035	0.039		○		
11NR14W	11NL14W	1.814	14	1/4"	0.43	0.009	0.035	0.039		○		
16NR28W	16NL28W	0.907	13	3/8"	0.63	0.003	0.031	0.035		○		
16NR26W	16NL26W	0.977	26	3/8"	0.63	0.003	0.031	0.035		○		
16NR24W	16NL24W	1.058	24	3/8"	0.63	0.004	0.031	0.035		○		
16NR20W	16NL20W	1.27	20	3/8"	0.63	0.006	0.031	0.035		○		
16NR19W	16NL19W	1.337	19	3/8"	0.63	0.006	0.031	0.035		○		
16NR18W	16NL18W	1.411	18	3/8"	0.63	0.008	0.031	0.035		○		
16NR16W	16NL16W	1.588	16	3/8"	0.63	0.009	0.035	0.039		○		
16NR14W	16NL14W	1.814	14	3/8"	0.63	0.009	0.035	0.039		○		
16NR12W	16NL12W	2.117	12	3/8"	0.63	0.01	0.039	0.047		○		
16NR11W	16NL11W	2.309	11	3/8"	0.63	0.011	0.039	0.055		○		
16NR10W	16NL10W	2.54	10	3/8"	0.63	0.012	0.043	0.059		○		
16NR9W	16NL9W	2.822	9	3/8"	0.63	0.013	0.043	0.059		○		
16NR8W	16NL8W	3.175	8	3/8"	0.63	0.013	0.047	0.059		○		
16NR7W	16NL7W	3.629	7	3/8"	0.63	0.013	0.047	0.059		○		
22NR7W	22NL7W	3.629	7	1/2"	0.87	0.014	0.063	0.088		○		
22NR6W	22NL6W	4.233	6	1/2"	0.87	0.014	0.063	0.088		○		
22NR5W	22NL5W	5.08	5	1/2"	0.87	0.015	0.063	0.088		○		
22NR4.5W	22NL4.5W	5.644	4.5	1/2"	1.06	0.016	0.072	0.091		○		
22NR4W	22NL4W	6.35	4	1/2"	1.06	0.018	0.072	0.091		○		
27NR4.5W	27NL4.5W	5.644	4.5	5/8"	1.06	0.017				○		
27NR4W	27NL4W	6.35	4	5/8"	1.06	0.02				○		
27VNR4W	27VNL4W	6.35	4	5/8"	1.06	0.02				○		
27VNR3W	27VNL3W	8.466	3	5/8"	1.06	0.048				○		
27VNR2.5W	27VNL2.5W	10.16	2.5	5/8"	1.06	0.056				○		

● Stock Item ○ Non-Stock Item

60°NPTF

EXTERNAL

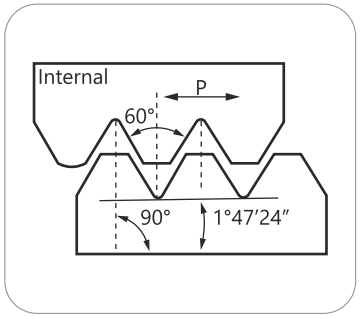

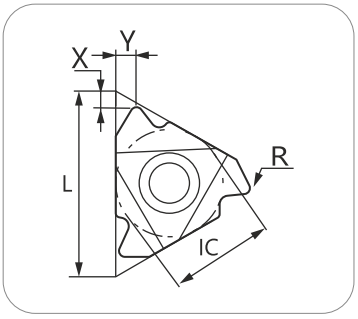

Type Right Hand	Type Left Hand	Pitch		Insert Size		Dimensions			P	M	K	N
		mm	TPI	IC	L/inch	R	X	Y		PT2330		
11ER27NPTF	11EL27NPTF	0.941	27	1/4"	0.43	0.003	0.039	0.031		○		
11ER18NPTF	11EL18NPTF	1.411	18	1/4"	0.43	0.004	0.039	0.031		○		
11ER14NPTF	11EL14NPTF	1.814	14	1/4"	0.43	0.005	0.039	0.031		○		
16ER27NPTF	16EL27NPTF	0.941	27	1/4"	0.43	0.003	0.039	0.031		○		
18ER18NPTF	18EL18NPTF	1.411	18	3/8"	0.63	0.004	0.039	0.031		○		
16ER14NPTF	16EL14NPTF	1.814	14	3/8"	0.63	0.005	0.039	0.031		○		
16ER11.5NPTF	16EL11.5NPTF	2.209	11.5	3/8"	0.63	0.007	0.052	0.049		○		
16ER8NPTF	16EL8NPTF	3.175	8	3/8"	0.63	0.009	0.071	0.051		○		

● Stock Item ○ Non-Stock Item

60°NPTF

INTERNAL

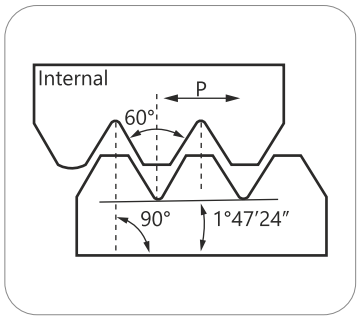

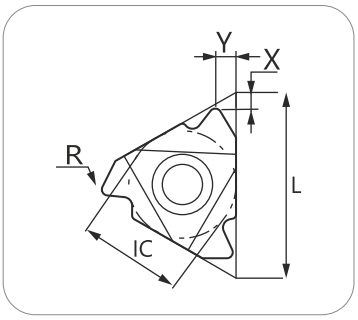

Type Right Hand	Type Left Hand	Pitch		Insert Size		Dimensions			P	M	K	N
		mm	TPI	IC	L/inch	R	X	Y		PT2330		
11NR27NPTF	11NL27NPTF	0.941	27	1/4"	0.43	0.003	0.039	0.031		○		
11NR18NPTF	11NL18NPTF	1.411	18	1/4"	0.43	0.004	0.039	0.031		○		
11NR14NPTF	11NL14NPTF	1.814	14	1/4"	0.43	0.005	0.039	0.031		○		
16NR27NPTF	16NL27NPTF	0.941	27	1/4"	0.43	0.003	0.039	0.031		○		
18NR18NPTF	18NL18NPTF	1.411	18	3/8"	0.63	0.003	0.039	0.031		○		
16NR14NPTF	16NL14NPTF	1.814	14	3/8"	0.63	0.004	0.039	0.031		○		
16NR11.5NPTF	16NL11.5NPTF	2.209	11.5	3/8"	0.63	0.006	0.052	0.049		○		
16NR8NPTF	16NL8NPTF	3.175	8	3/8"	0.63	]0.008	0.071	0.051		○		

● Stock Item ○ Non-Stock Item

BSPT-55°

EXTERNAL

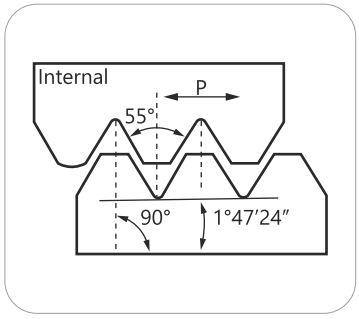

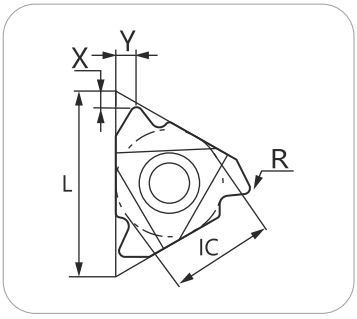

Type Right Hand	Type Left Hand	Pitch		Insert Size		Dimensions			P	M	K	N
		mm	TPI	IC	L/inch	R	X	Y		PT2330		
11ER28BSPT	11EL28BSPT	0.907	28	1/4"	0.43	0.003	0.031	0.035		○		
11ER19BSPT	11EL19BSPT	1.337	19	1/4"	0.43	0.004	0.037	0.039		○		
11ER14BSPT	11EL14BSPT	1.814	14	1/4"	0.43	0.006	0.047	0.039		○		
16ER28BSPT	16EL28BSPT	0.907	28	3/8"	0.63	0.003	0.031	0.035		○		
18ER19BSPT	18EL19BSPT	1.337	19	3/8"	0.63	0.004	0.037	0.039		○		
16ER14BSPT	16EL14BSPT	1.814	14	3/8"	0.63	0.006	0.047	0.039		○		
16ER11BSPT	16EL11BSPT	2.309	11	3/8"	0.63	0.007	0.059	0.041		○		

● Stock Item ○ Non-Stock Item

BSPT-55°

INTERNAL

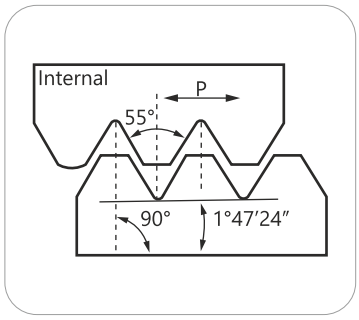

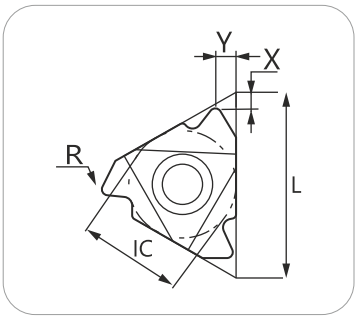

Type Right Hand	Type Left Hand	Pitch		Insert Size		Dimensions			P	M	K	N
		mm	TPI	IC	L/inch	R	X	Y		PT2330		
11NR28BSPT	11NL28BSPT	0.907	28	1/4"	0.43	0.003	0.031	0.035		○		
11NR19BSPT	11NL19BSPT	1.337	19	1/4"	0.43	0.004	0.037	0.039		○		
11NR14BSPT	11NL14BSPT	1.814	14	1/4"	0.43	0.006	0.047	0.039		○		
16NR28BSPT	16NL28BSPT	0.907	28	3/8"	0.63	0.003	0.031	0.035		○		
18NR19BSPT	18NL19BSPT	1.337	19	3/8"	0.63	0.004	0.037	0.039		○		
16NR14BSPT	16NL14BSPT	1.814	14	3/8"	0.63	0.005	0.047	0.039		○		
16NR11BSPT	16NL11BSPT	2.309	11	3/8"	0.63	0.006	0.059	0.041				

● Stock Item ○ Non-Stock Item

TR-30°

Trapez DIN 103

EXTERNAL

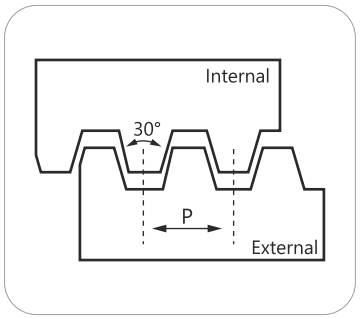

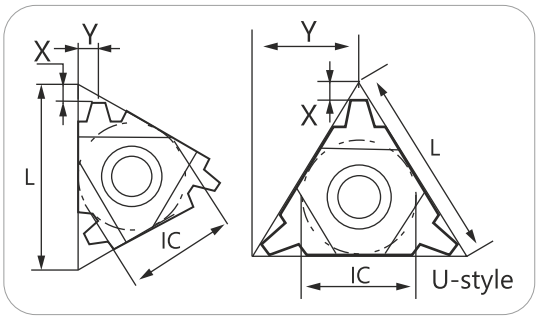

Type Right Hand	Type Left Hand	Pitch mm	Pitch TPI	Insert Size IC	Insert Size L/inch	Dimensions R	Dimensions X	Dimensions Y	P	M	K	N
										PT2330		
16ER1.5TR	16EL1.5TR	1.5		3/8"	0.63	0.003	0.041	0.039		○		
16ER2.0TR	16EL2.0TR	2		3/8"	0.63	0.004	0.051	0.043		○		
16ER3.0TR	16EL3.0TR	3		3/8"	0.63	0.006	0.059	0.051		○		
22ER4.0TR	22EL4.0TR	4		1/2"	0.87	0.008	0.075	0.067		○		
22ER5.0TR	22EL5.0TR	5		1/2"	0.87	0.009	0.098	0.083		○		
22ER6.0TR	22EL6.0TR	6		1/2"	0.87	0.011	0.101	0.099		○		
22ER7.0TR	22EL7.0TR	7		1/2"	0.87	0.012	0.095	0.54		○		
27ER6.0TR	27EL6.0TR	6		5/8"	1.06	0.011				○		
27ER7.0TR	27EL7.0TR	7		5/8"	1.06	0.012				○		
27VER6.0TR	27VEL6.0TR	6		5/8"	1.06	0.008				○		
27VER7.0TR	27VEL7.0TR	7		5/8”	1.06	0.009				○		
27VER8.0TR	27VEL8.0TR	8		5/8"	1.06	0.011				○		
27VER9.0TR	27VEL9.0TR	9		5/8"	1.06	0.012				○		
27VER10TR	27VEL10TR	10		5/8"	1.06	0.013				○		
27VER12TR	27VEL12TR	12		5/8"	1.06	0.014				○		

● Stock Item ○ Non-Stock Item

TR-30°

Trapez DIN 103

INTERNAL

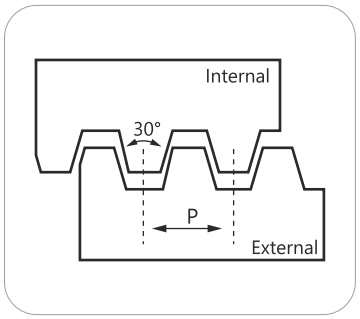

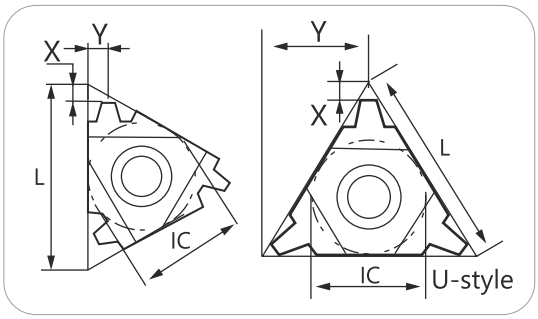

Type Right Hand	Type Left Hand	Pitch mm	Pitch TPI	Insert Size IC	Insert Size L/inch	Dimensions R	Dimensions X	Dimensions Y	P	M	K	N
										PT2330		
16ER1.5TR	16NL1.5TR	1.5		3/8"	0.63	0.003	0.041	0.039		○		
16ER2.0TR	16NL2.0TR	2		3/8"	0.63	0.004	0.051	0.043		○		
16ER3.0TR	16NL3.0TR	3		3/8"	0.63	0.006	0.059	0.051		○		
22ER4.0TR	22NL4.0TR	4		1/2"	0.87	0.008	0.075	0.067		○		
22ER5.0TR	22NL5.0TR	5		1/2"	0.87	0.009	0.098	0.083		○		
22ER6.0TR	22NL6.0TR	6		1/2"	0.87	0.01	0.101	0.099		○		
22ER7.0TR	22NL7.0TR	7		1/2"	0.87	0.011	0.095	0.54		○		
27ER6.0TR	27NL6.0TR	6		5/8"	1.06	0.011				○		
27ER7.0TR	27NL7.0TR	7		5/8"	1.06	0.012				○		
27VER6.0TR	27VNL6.0TR	6		5/8"	1.06	0.008				○		
27VER7.0TR	27VNL7.0TR	7		5/8”	1.06	0.009				○		
27VER8.0TR	27VNL8.0TR	8		5/8”	1.06	0.011				○		
27VER9.0TR	27VNL9.0TR	9		5/8”	1.06	0.012				○		
27VER10TR	27VNL10TR	10		5/8”	1.06	0.013				○		
27VER12TR	27VNL12TR	12		5/8”	1.06	0.014				○		

● Stock Item ○ Non-Stock Item

ACME-29°

American ACME

EXTERNAL

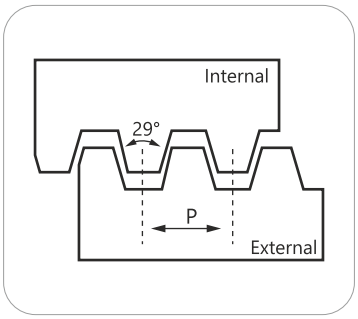

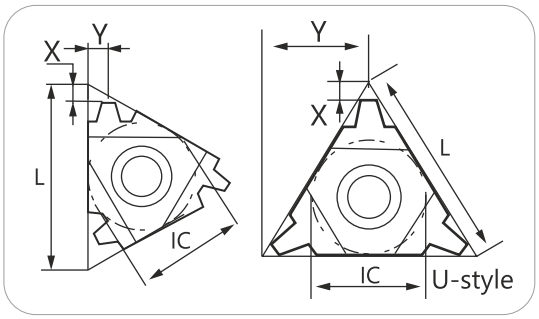

Type Right Hand	Type Left Hand	Pitch		Insert Size		Dimensions			P	M	K	N
		mm	TPI	IC	L/inch	R	X	Y		PT2330		
16ER16ACME	16EL16ACME	1.588	16	3/8"	0.63	0.003	0.043	0.039		○		
16ER14ACME	16EL14ACME	1.814	14	3/8"	0.63	0.004	0.043	0.039		○		
16ER12ACME	16EL12ACME	2.117	12	3/8"	0.63	0.006	0.047	0.043		○		
16ER10ACME	16EL10ACME	2.54	10	3/8"	0.63	0.008	0.055	0.051		○		
16ER8ACME	16EL8ACME	3.175	8	3/8"	0.63	0.009	0.059	0.055		○		
22ER6ACME	22EL6ACME	4.233	6	1/2"	0.87	0.011	0.083	0.071		○		
22ER5ACME	22EL5ACME	5.08	5	1/2"	0.87	0.016	0.09	0.079		○		
22ER4ACME	22EL4ACME	6.35	4	1/2"	0.87	0.021	0.112	0.092		○		
27ER4ACME	27EL4ACME	6.35	4	5/8"	1.06	0.021				○		
27VER3ACME	27VEL3ACME	8.466	3	5/8"	1.06	0.026				○		

● Stock Item ○ Non-Stock Item

ACME-29°

American ACME

INTERNAL

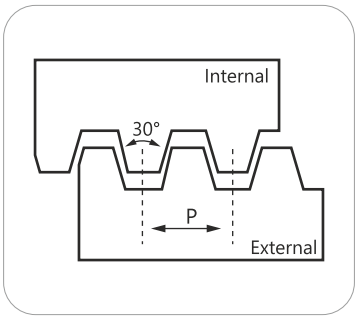

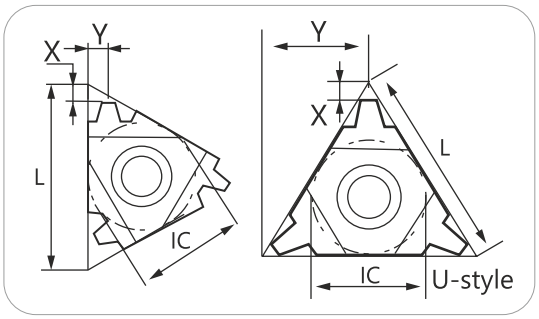

Type Right Hand	Type Left Hand	Pitch		Insert Size		Dimensions			P	M	K	N
		mm	TPI	IC	L/inch	R	X	Y		PT2330		
16NR16ACME	16NL16ACME	1.588	16	3/8"	0.63	0.003	0.043	0.039		○		
16NR14ACME	16NL14ACME	1.814	14	3/8"	0.63	0.004	0.043	0.039		○		
16NR12ACME	16NL12ACME	2.117	12	3/8"	0.63	0.006	0.047	0.043		○		
16NR10ACME	16NL10ACME	2.54	10	3/8"	0.63	0.008	0.055	0.051		○		
16NR8ACME	16NL8ACME	3.175	8	3/8"	0.63	0.009	0.059	0.055		○		
22NR6ACME	22NL6ACME	4.233	6	1/2"	0.87	0.01	0.083	0.071		○		
22NR5ACME	22NL5ACME	5.08	5	1/2"	0.87	0.016	0.09	0.079		○		
22NR4ACME	22NL4ACME	6.35	4	1/2"	0.87	0.021	0.112	0.092		○		
27NR4ACME	27NL4ACME	6.35	4	5/8"	1.06	0.021				○		
27VNR3ACME	27VNL3ACME	8.466	3	5/8"	1.06	0.026				○		

● Stock Item ○ Non-Stock Item

STACME-29°

Stub ACME

EXTERNAL

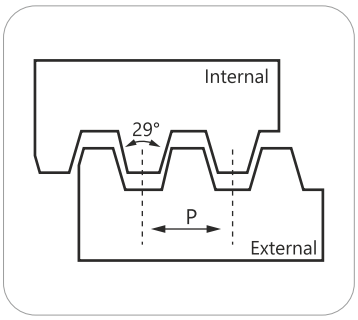

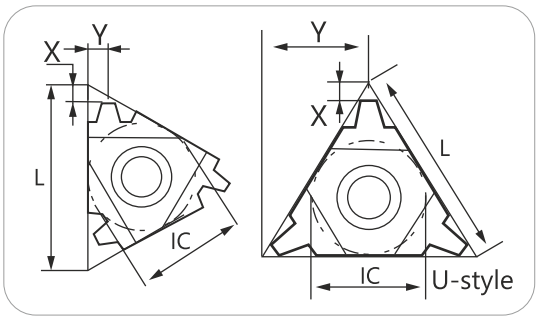

Type Right Hand	Type Left Hand	Pitch		Insert Size		Dimensions			P	M	K	N
		mm	TPI	IC	L/inch	R	X	Y		PT2330		
16ER16STACME	16EL16STACME	1.588	16	3/8"	0.63	0.003	0.039	0.039		○		
16ER14STACME	16EL14STACME	1.814	14	3/8”	0.63	0.004	0.039	0.039		○		
16ER12STACME	16EL12STACME	2.117	12	3/8"	0.63	0.006	0.051	0.047		○		
16ER10STACME	16EL10STACME	2.54	10	3/8"	0.63	0.008	0.051	0.047		○		
16ER8STACME	16EL8STACME	3.175	8	3/8"	0.63	0.009	0.059	0.055		○		
16ER6TSTACME	16EL6TSTACME	4.233	6	3/8"	0.63	0.011	0.059	0.055		○		
22ER6STACME	22EL6STACME	4.233	6	1/2"	0.87	0.011	0.059	0.055		○		
22ER5STACME	22EL5STACME	5.08	5	1/2"	0.87	0.016	0.09	0.083		○		
22ER4STACME	22EL4STACME	6.35	4	1/2"	0.87	0.021	0.099	0.087		○		
27ER4STACME	27EL4STACME	6.35	4	5/8"	1.06	0.021				○		
27VER3STACME	27VEL3STACME	8.466	3	5/8"	1.06	0.026				○		

● Stock Item ○ Non-Stock Item

STACME-29°

Stub ACME

INTERNAL

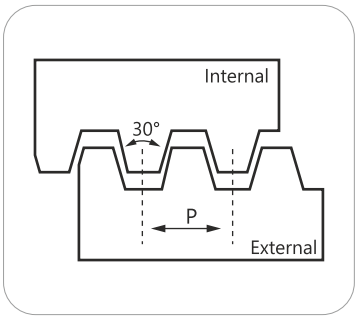

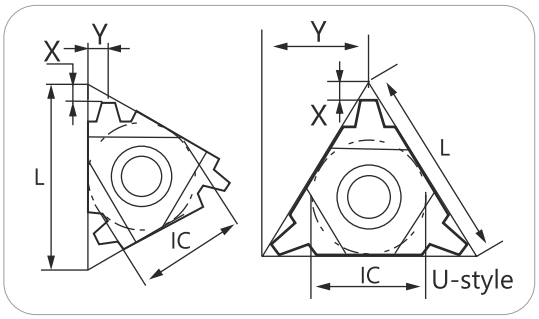

Type Right Hand	Type Left Hand	Pitch		Insert Size		Dimensions			P	M	K	N
		mm	TPI	IC	L/inch	R	X	Y		PT2330		
16NR16STACME	16NL16STACME	1.588	16	3/8"	0.63	0.003	0.039	0.039		○		
16NR14STACME	16NL14STACME	1.814	14	3/8”	0.63	0.004	0.039	0.039		○		
16NR12STACME	16NL12STACME	2.117	12	3/8"	0.63	0.006	0.051	0.047		○		
16NR10STACME	16NL10STACME	2.54	10	3/8"	0.63	0.007	0.051	0.047		○		
16NR8STACME	16NL8STACME	3.175	8	3/8"	0.63	0.008	0.059	0.055		○		
16NR6STACME	16NL6STACME	4.233	6	3/8"	0.63	0.009	0.059	0.055		○		
22NR6STACME	22NL6STACME	4.233	6	1/2"	0.87	0.009	0.059	0.055		○		
22NR5STACME	22NL5STACME	5.08	5	1/2"	0.87	0.014	0.09	0.083		○		
22NR4STACME	22NL4STACME	6.35	4	1/2"	0.87	0.019	0.099	0.087		○		
27NR4STACME	27NL4STACME	6.35	4	5/8"	1.06	0.021				○		
27VNR3STACME	27VNL3STACME	8.466	3	5/8"	1.06	0.026				○		

● Stock Item ○ Non-Stock Item

Recommenced cutting materials - speed parameters

Cutting Speed	ISO	P			M		K		N	S		H
	MG	P1 - P3	P4 - P7	P8 - P12	M1 - M3	M4 - M5	K1 - K4	K5 - K7	N1 - N11	S1 - S3	S11 - S13	H5 - H21
	Sub-Group	Low Carbon Steel	Medium Alloyed Steel	High Alloyed Steel	Ferritic & Martensitic Steel	Austenitic Stainless Steel	Grey Cast Iron	Ductile Iron	Non-Ferrous Metals	Titanium Alloys	Heat Resistant Alloy	Hard Materials
Vc (m/min)	PC3115 Min - Max	---	---	---	---	---	---	---	---	---	---	---
	PC3215 Min - Max	---	---	---	---	---	---	---	---	---	---	---
	PC2325 Min - Max	---	---	---	---	---	---	---	---	---	---	---
	PC2025 Min - Max	---	---	---	---	---	---	---	---	---	---	---
	PC4025 Min - Max	---	---	---	---	---	---	---	---	---	---	---
	PC4325 Min - Max	---	---	---	---	---	---	---	---	---	---	---
	PC4925 Min - Max	---	---	---	---	---	---	---	---	---	---	---
	PC2125 Min - Max	---	---	---	---	---	---	---	---	---	---	---
	PC4525 Min - Max	---	---	---	---	---	---	---	---	---	---	---
	PT2330 Min - Max	200 300 400	200 250 320	180 200 280	130 150 200	85 90 120	160 250 390	200 250 300	100 200 330	40 60 80	50 20 25	---

Troubleshooting

Rapid flank wear

- Reduce the cutting speed
- Increase the infeed per pass
- Use modified flank infeed
- Check that the correct insert shim has been selected
- Select a more wear-resistant grade

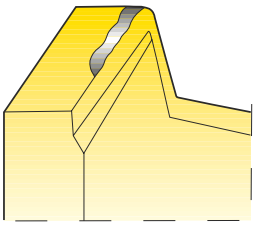

Insert fracture

- Increase the number of passes
- Check the workpiece mounting
- Check the centre height of the cutting edge
- Check for built-up edge
- Select a tougher grade

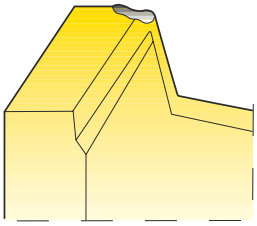

Plastic deformation

- Select a grade with better resistance to plastic deformation
- Reduce the cutting speed
- Increase the number of passes
- Increase the coolant supply
- Check that the workpiece diameter is correct prior to cutting the thread

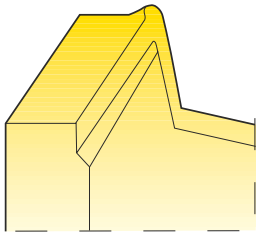

Vibrations

- Change the cutting speed
- Reduce the overhang and use the most stable tool holder
- Check the centre height of the cutting edge
- Check that the workpiece diameter is correct

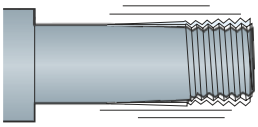

Build-up edge

- Increase the cutting speed
- Do not use coolant

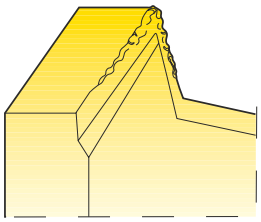

Poor finish

- Increase the cutting speed
- Check that the correct insert shim has been selected
- Use modified flank infeed or radial infeed

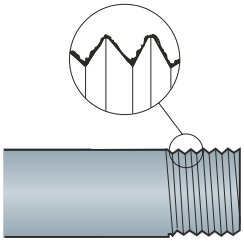

Edge chipping

- Check the workpiece mounting
- Check the cutting speed
- Use modified flank infeed
- Select a tougher grade

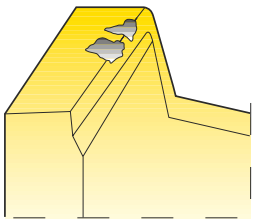

Poor chip control

- Reduce the number of passes
- Increase the cutting speed
- Use modified flank infeed
- Increase the coolant supply

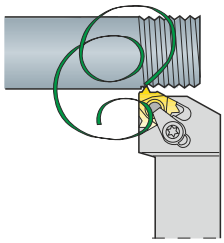

Thread turning

Technical information

Nomenclature and formula

RPM

$$n = \frac{v_c \cdot 1000}{\pi \cdot D_c} \quad \text{(rev/min)}$$

Cutting speed

$$v_c = \frac{n \cdot \pi \cdot D_c}{1000} \quad \text{(m/min)}$$

Slide velocity / feed rate

$$v_f = \frac{n \cdot P_h}{1000} \quad \text{(mm/min)}$$

Lead

$$P_h = P \cdot \text{numbers of starts} \quad \text{(mm)}$$

Helix angle

$$\lambda = \arctan \frac{P_h}{D_2 \cdot \pi} \quad (°)$$

Conversion of P to TPI

$$TPI = \frac{25{,}4}{P}$$

D_c	=	Workpiece diameter (mm)
D_2	=	Pitch diameter (mean diameter) (mm)
n	=	RPM(rev/min)
P	=	Pitch(mm)
P_h	=	Lead(mm)
V_f	=	Slide velocity (feed rate) (m/min)
TPI	=	Number of threads per inch
v_c	=	Cutting speed (mm/min)
λ	=	Helix angle (°)

RPM

$$n = \frac{v_c \cdot 3.82}{D} \quad \text{(rev/min)}$$

Cutting speed

$$v_c = \frac{0.262 \cdot D \cdot n}{1000} \quad \text{(sf/min)}$$

Slide velocity / feed rate

$$Sv = \frac{n \cdot P_h}{1000} \quad \text{(in/min)}$$

Lead

$$P_h = P \cdot \text{numbers of starts} \quad \text{(inch)}$$

Helix angle

$$\lambda = \arctan \frac{P_h}{D_2 \cdot \pi} \quad (°)$$

Conversion Pitch – TPI

$$P = \frac{1}{TPI}$$

D	=	Workpiece diameter (inch)
D_2	=	Pitch diameter (effective diameter) (inch)
n	=	RPM (r/min)
P	=	Pitch (inch)
P_h	=	Lead (inch)
Sv	=	Slide velocity (in/min)
TPI	=	Thread per inch
v_c	=	Cutting speed (sf/min)
λ	=	Helix angle (°)

Number of threading passes selection for single point inserts

Pitch : mm / TPI	0.5 / 48	0.8 / 32	1.0 / 24	1.25 / 20	1.5 / 16	1.75 / 14	2.0 / 12	2.5 / 10	3.0 / 8	4.0 / 6	6.0 / 4
Number of Passes	3-6	4-7	4-9	6-10	5-11	9-12	6-13	7-15	8-17	10-20	11-22

NOTES:

1. For most standard applications the middle of the range is a good starting point.
2. For most materials, the tougher the material, the higher the number of cutting passes you should select.
3. As a general rule of thumb, fewer passes are better than more speed.

Thread turning methods

External

Right Hand Thread

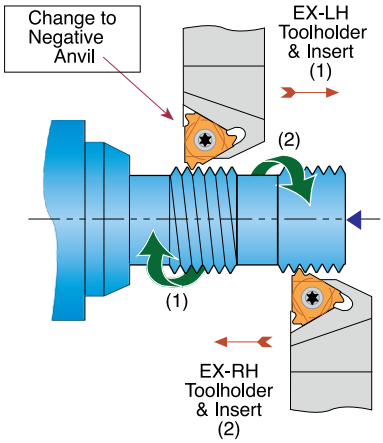

Light Hand Thread

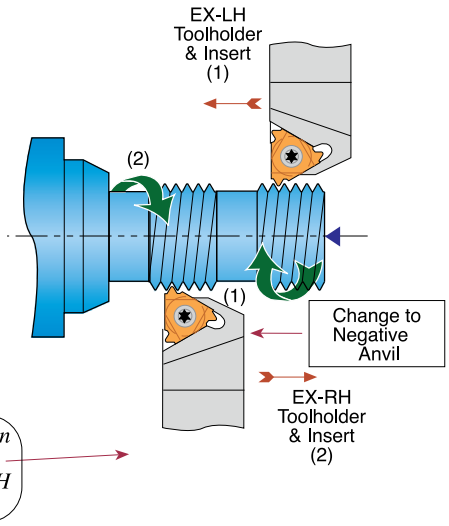

Internal

Right Hand Thread

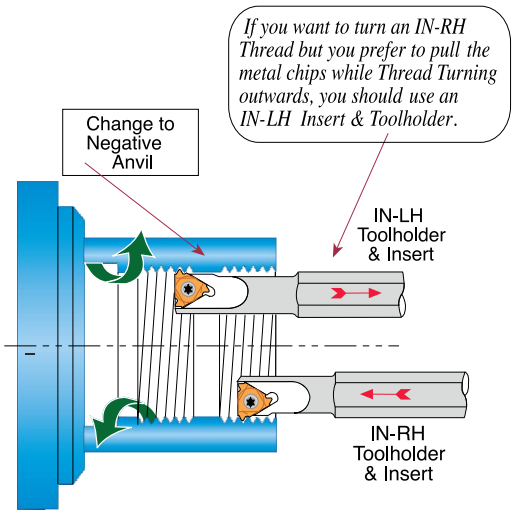

Light Hand Thread

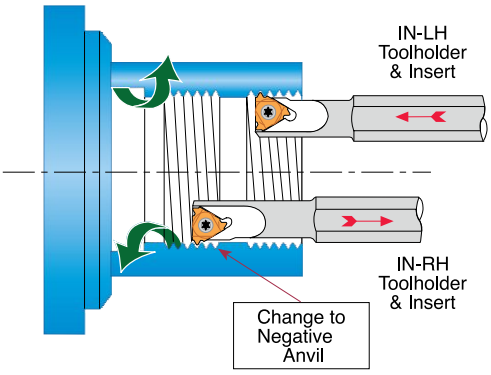

Important Points about Threading Inserts

1. In most thread forms internal and external threads have different depth and radii, thus tools are not interchangeable

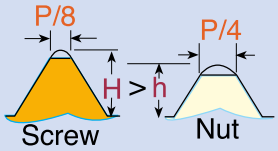

2. The Insert relief angle of a standard Carmex external toolholder is 10°; for an internal toolholder it is 15°. This 5° difference is to provide additional necessary radial clearance.

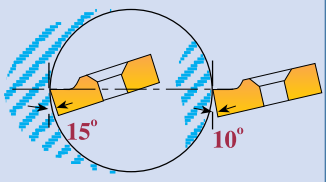

3. Our built-in relief angles ensure automatic insert flank angle clearance.

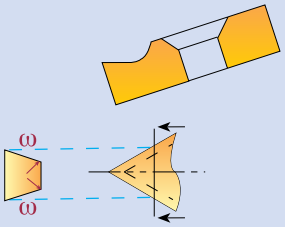

4. Profiles of Carmex internal & external threading inserts are precision ground to ensure accurate thread geometry when used in their corresponding toolholders.
Using internal inserts with an external holder will result in distortion of angle and insert geometry.

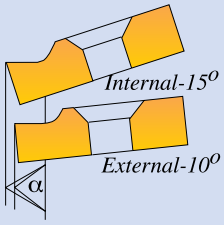

5. Insert and toolholder should always match.
An IN-RH insert must be used with an IN-RH toolholder.
No mismatch is allowed.

Flank Clearance Angle ω

$$\omega = ArcTan\,(Tan\,\alpha \times Tan\,\phi)$$

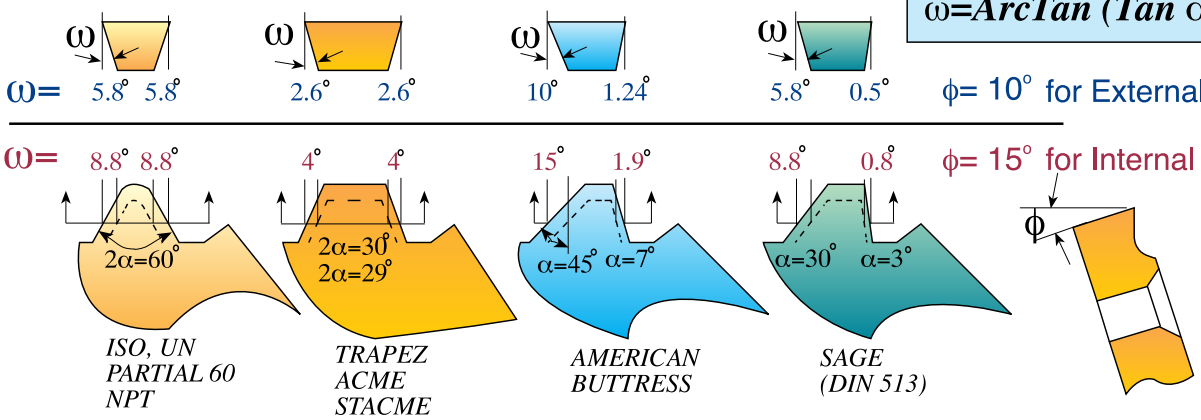

ϕ= 10° for External toolholders

ϕ= 15° for Internal toolholders

Turning : Thread Turning Tools

Threading Tools

Depth of Cut And Number of Passes

Unified (UN) 60° External

No. of Passes	TPI												
	32	28	24	20	18	16	14	13	12	11	10	9	8
	Radial infeed per pass (mm)												
1	0.178	0.178	0.178	0.203	0.229	0.229	0.229	0.254	0.279	0.279	0.279	0.279	0.305
2	0.152	0.152	0.178	0.178	0.203	0.203	0.229	0.229	0.229	0.254	0.229	0.229	0.254
3	0.127	0.127	0.152	0.152	0.152	0.152	0.178	0.178	0.203	0.203	0.203	0.203	0.229
4	0.076	0.102	0.127	0.127	0.152	0.152	0.152	0.152	0.152	0.178	0.178	0.178	0.178
5	0.533	0.076	0.076	0.102	0.127	0.127	0.127	0.152	0.152	0.152	0.152	0.152	0.178
6	0.635	0.711	0.076	0.076	0.102	0.102	0.127	0.152	0.152	0.152	0.152	0.152	0.152
7				0.838	0.940	0.076	0.102	0.102	0.127	0.127	0.152	0.152	0.152
8						1.041	0.076	0.076	0.076	0.102	0.127	0.127	0.152
9							1.194	1.270	1.372	0.076	0.102	0.127	0.127
10										1.499	0.076	0.102	0.127
11											1.651	0.076	0.102
12												1.778	0.076
13													2.032

Last pass equals total depth of thread.

Unified (UN) 60° Internal

No. of Passes	TPI												
	32	28	24	20	18	16	14	13	12	11	10	9	8
	Radial infeed per pass (mm)												
1	0.178	0.178	0.178	0.203	0.229	0.229	0.229	0.254	0.279	0.279	0.279	0.279	0.305
2	0.152	0.152	0.152	0.178	0.178	0.178	0.203	0.229	0.229	0.229	0.229	0.229	0.279
3	0.102	0.102	0.152	0.127	0.152	0.152	0.152	0.152	0.178	0.178	0.152	0.178	0.203
4	0.076	0.102	0.102	0.102	0.127	0.127	0.152	0.152	0.152	0.152	0.152	0.152	0.178
5	0.508	0.076	0.076	0.102	0.102	0.102	0.102	0.127	0.127	0.152	0.152	0.152	0.152
6		0.610	0.660	0.076	0.076	0.102	0.102	0.102	0.102	0.127	0.127	0.152	0.152
7				0.787	0.864	0.076	0.102	0.102	0.102	0.102	0.102	0.127	0.127
8						0.940	0.076	0.076	0.076	0.102	0.102	0.102	0.102
9							1.118	1.194	1.245	0.076	0.102	0.102	0.102
10										1.397	0.076	0.102	0.102
11											1.499	0.076	0.102
12												1.651	0.076
13													1.880

Last pass equals total depth of thread.

Turning : Thread Turning Tools

Threading Tools

Depth of Cut And Number of Passes

ISO Metric 60° External

No. of Passes	Pitch (mm)															
	0.5	0.75	0.8	1.0	1.25	1.5	1.75	2.0	2.5	3.0	3.5	4.0	4.5	5.0	5.5	6.0
	Radial infeed per pass (mm)															
1	0.102	0.178	0.178	0.178	0.178	0.229	0.229	0.254	0.279	0.279	0.330	0.330	0.381	0.406	0.432	0.457
2	0.102	0.152	0.152	0.178	0.178	0.203	0.203	0.229	0.254	0.254	0.305	0.330	0.330	0.381	0.406	0.432
3	0.076	0.102	0.127	0.127	0.152	0.178	0.152	0.178	0.203	0.203	0.254	0.254	0.279	0.330	0.330	0.356
4	0.076	0.076	0.076	0.102	0.127	0.152	0.152	0.152	0.178	0.178	0.203	0.229	0.229	0.279	0.279	0.305
5	0.356	0.508	0.533	0.076	0.102	0.127	0.127	0.152	0.152	0.152	0.178	0.178	0.229	0.229	0.229	0.279
6				0.660	0.076	0.076	0.102	0.127	0.127	0.152	0.178	0.178	0.203	0.229	0.229	0.229
7					0.813	0.965	0.102	0.102	0.127	0.127	0.152	0.152	0.178	0.203	0.203	0.229
8							0.076	0.076	0.102	0.127	0.152	0.152	0.178	0.178	0.178	0.203
9							1.143	1.270	0.102	0.127	0.152	0.152	0.152	0.178	0.178	0.203
10									0.076	0.102	0.127	0.127	0.152	0.178	0.178	0.178
11									1.600	0.102	0.102	0.127	0.152	0.152	0.152	0.178
12										0.076	0.076	0.127	0.127	0.152	0.152	0.152
13										1.880	2.210	0.102	0.127	0.127	0.127	0.152
14												0.076	0.102	0.102	0.127	0.152
15												2.515	2.819	3.124	0.127	0.127
16															0.102	0.102
															3.429	3.734

Last pass equals total depth of thread.

ISO Metric 60° Internal

No. of Passes	Pitch (mm)														
	0.5	0.75	1.0	1.25	1.5	1.75	2.0	2.5	3.0	3.5	4.0	4.5	5.0	5.5	6.0
	Radial infeed per pass (mm)														
1	0.102	0.178	0.178	0.203	0.254	0.229	0.254	0.279	0.279	0.305	0.330	0.356	0.381	0.381	0.406
2	0.102	0.127	0.152	0.178	0.203	0.203	0.229	0.229	0.229	0.279	0.305	0.330	0.356	0.356	0.406
3	0.076	0.102	0.102	0.127	0.152	0.152	0.178	0.178	0.203	0.229	0.229	0.279	0.305	0.305	0.356
4	0.076	0.076	0.102	0.102	0.102	0.127	0.152	0.152	0.152	0.203	0.203	0.229	0.254	0.254	0.279
5	0.356	0.483	0.076	0.102	0.102	0.102	0.127	0.152	0.152	0.178	0.178	0.203	0.229	0.229	0.229
6			0.610	0.076	0.076	0.102	0.102	0.127	0.152	0.152	0.152	0.178	0.203	0.203	0.229
7				0.787	0.889	0.102	0.102	0.102	0.127	0.152	0.152	0.152	0.178	0.178	0.203
8						0.076	0.076	0.102	0.102	0.152	0.152	0.152	0.152	0.178	0.178
9						1.092	1.219	0.102	0.102	0.127	0.127	0.152	0.152	0.152	0.178
10								0.076	0.102	0.102	0.127	0.152	0.152	0.152	0.152
11								1.499	0.102	0.102	0.102	0.127	0.152	0.152	0.152
12									0.076	0.076	0.102	0.127	0.152	0.152	0.152
13									1.778	2.057	0.102	0.102	0.127	0.152	0.152
14											0.076	0.102	0.102	0.127	0.152
15											2.337	2.642	2.896	0.127	0.127
16														0.102	0.102
														3.200	3.454

Last pass equals total depth of thread.

promill

A	P	M	T
①	②	③	④

① Shape code

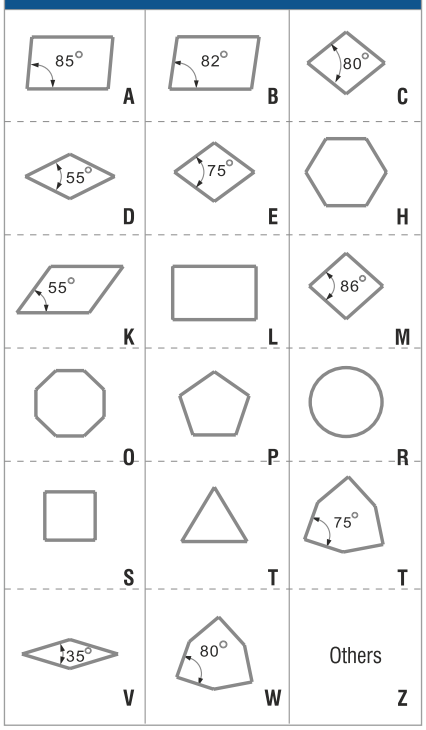

③ Tolerance (mm)

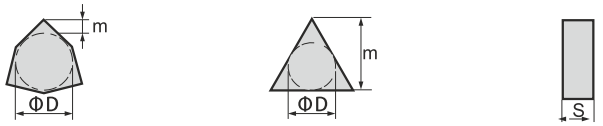

Class	Corner height (m)	Inscribed circle (ϕD)	Thickness (S)
A	±0.005	±0.025	±0.025
F	±0.005	±0.013	±0.025
C	±0.013	±0.025	±0.025
H	±0.013	±0.013	±0.025
E	±0.025	±0.025	±0.025
G	±0.025	±0.025	±0.13
J	±0.005	±0.05-±0.13	±0.025
K	±0.013	±0.05-±0.13	±0.025
L	±0.025	±0.05-±0.13	±0.025
M	±0.08-±0.18	±0.05-±0.13	±0.13
N	±0.08-±0.18	±0.05-±0.13	±0.025
U	±0.13-±0.38	±0.08-±0.25	±0.13

- M-class tolerance requirements (distinguished by shape and inscribed circle size)
- Corner height (m) tolerance

Inscribed circle	Regular triangle	Square	80° rhombus	55° rhombus	35° rhombus	Circular
6.35	±0.08	±0.08	±0.08	±0.11	±0.16	---
9.525	±0.08	±0.08	±0.08	±0.11	±0.16	---
12.7	±0.13	±0.13	±0.13	±0.15	---	---
15.875	±0.15	±0.15	±0.15	±0.18	---	---
19.05	±0.15	±0.15	±0.15	±0.18	---	---
25.4	---	±0.18	---	---	---	---

- Inscribed circle (ϕD) tolerence

Inscribed circle	Regular triangle	Square	80° rhombus	55° rhombus	35° rhombus	Circular
6.35	±0.05	±0.05	±0.05	±0.05	±0.05	---
9.525	±0.05	±0.05	±0.05	±0.05	±0.05	±0.05
12.7	±0.08	±0.08	±0.08	±0.08	---	±0.08
15.875	±0.10	±0.10	±0.10	±0.10	---	±0.10
19.05	±0.10	±0.10	±0.10	±0.10	---	±0.10
25.4	---	±0.13	---	---	---	±0.13

② Cutting edge Clearance angle major

Code	Clearance Angle	Code	Clearance Angle
A	3°	B	5°
C	7°	D	15°
E	20°	F	25°
G	30°	N	0°
P	11°	O	Others

④ Chipbreaker and clamping form

Code	Hole	Chipbreaker	Sectional View	Code	Hole	Chipbreaker	Sectional View
B	Yes	N/A	> 65°	N	N/A	N/A	
H	Yes	Single-sided	> 65°	R	N/A	Single-sided	
C	Yes	N/A	> 65°	F	N/A	Doble-Sided	
J	Yes	Doble-Sided	> 65°	A	Yes	N/A	
W	Yes	N/A	≤65°	M	Yes	Single-sided	
T	Yes	Single-sided	≤65°	G	Yes	Single-sided	
Q	Yes	N/A	≤65°	X	---	---	Excep
U	Yes	Doble-Sided	≤65°				

16	05	PD	E	R	–	FM
⑤	⑥	⑦	⑧	⑨		⑩

⑤ Cutting edge length

Inscribed circle diameter (mm)	C	D	R	S	T	V	W	K
32.00			32					
31.75			31					
25.40			25	25				
25.00	25	25	25					
20.00			20					
19.05	19		19	19	33			
16.00		19	16					
15.875	16		15	15	27			
12.70	12	15	12	12	22		08	
12.00			12			22		
10.00			10					
9.525	09	11	09	09	16		06	
8.00			08			16		16
6.35	06	07			11			
6.00			06			11		
5.56					09			
5.50			05					
3.97					06			

⑥ Insert thickness

Code	Thickness (mm)
12	12.70
10	11.11
T9	9.72
09	9.52
07	7.94
T6	6.75
06	6.35
T5	5.95
05	5.56
T4	4.96
04	4.76
T3	3.97
03	3.18
T2	2.58
02	2.38
T1	1.98
01	1.59
T0	0.99
00	0.79

⑦ Wiper edge

A	45°	A	3°
D	60°	B	5°
E	75°	C	7°
F	85°	D	15°
P	90°	E	20°
Z	other	F	25°
		G	30°
		N	0°
		P	11°
		Z	other

⑧ Cutting edge form

F	0 - 5°	0 - 0.10	k(or not marked)
E	1 - 10°	1 - 0.15	P
	2 - 15°	2 - 0.20	
T	3 - 20°	3 - 0.25	W
	4 - 25°	4 - 0.30	
S	5 - 30°	5 - 0.35	Q
	1 - 10°	6 - 0.40	
	1 - 10°	7 - 0.45	

⑨ Cutting direction

Code	Direction
R	Right
L	Left
N	Two-way

⑩ Chipbreaker code

Code key of indexable milling tools

F	MR	45	3	L	063	A
①	②	③	④	⑤	⑥	⑦

① Tool type	
F	Arbor Type Tools
S	Shank Type Tools

② Usage	
FM	Face milling
TM	Slot milling
SM	Square shoulder milling
PM	Profile milling
CM	Chamfer milling
HF	High feed
HM	Helical end milling

③ Cutting edge angle	
45	45°
60	60°
75	75°
90	90°
00	Exception

④ Type	
1	Type 1
2	Type 2
...	...

⑤ Cutting direction	
R	Default
L	Sinistral cutting

⑥ Outside diameter	
016	Ø 16mm
020	Ø 20mm
025	Ø 25mm
032	Ø 32mm
040	Ø 40mm
050	Ø 50mm
063	Ø 63mm
080	Ø 80mm
100	Ø 100mm
125	Ø 125mm

⑦ Interface type	
A	A-type interface
B	B-type interface
C	C-type interface
D	D-type interface
G	Straight shank
X	Flat shank
BT	BT taper shank
JT	JT taper shank
MT	Morse taper shank
XPX	Compound shank
HSK	Short taper shank

Structure of tools installation part (Sleeve structure)

A-type interface

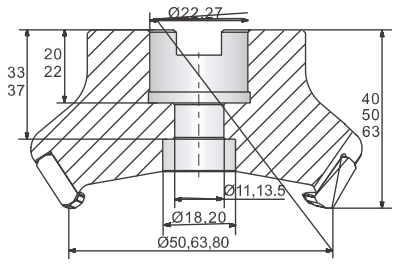

B-type interface

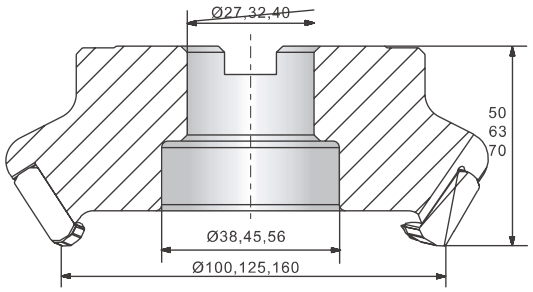

C-type interface

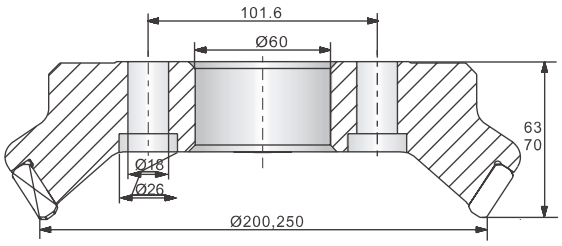

D-type interface

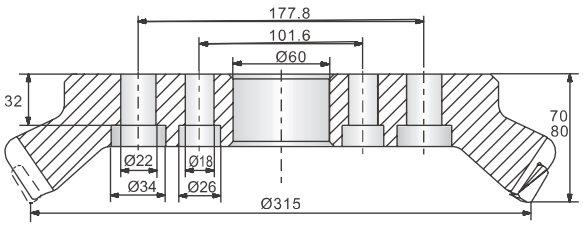

Code key of indexable milling tools

22	I	05	L	-	S	N	12
⑧	⑨	⑩	⑪		⑫	⑬	⑭

⑧ Sizes of tool installation parts	
16	Ø 16mm
22	Ø 22mm
27	Ø 27mm
32	Ø 32mm
40	Ø 40mm
60	Ø 60mm

⑨ Unit	
Inch	–
Metric	I

⑩ Number of teeth	
02	Two teeth
03	Three teeth
04	Four teeth
...	...

⑪ Length type	
Cutterhead Type	–
Shank Type	–
S	Short
L	Long
XL	Extra Long

⑫ Insert shape	
A	85°
H	
L	
O	
R	
S	
T	
W	80°
Others	

⑬ Insert clearance angle	
A	3°
B	5°
C	7°
D	15°
E	20°
F	25°
G	30°
N	0°
P	11°
0	Others

⑭ Cutting edge length	
09	9mm
10	10mm
12	12mm
15	15mm
19	19mm
Others	

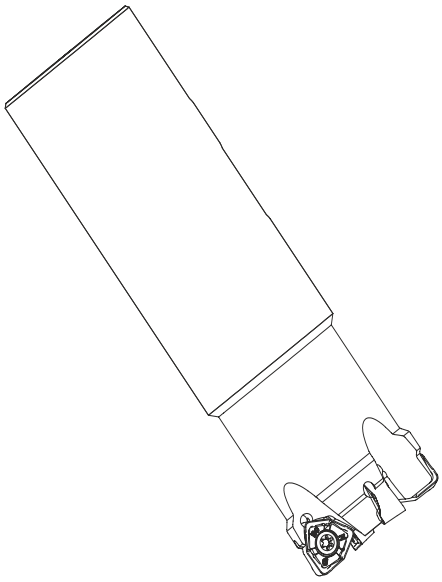

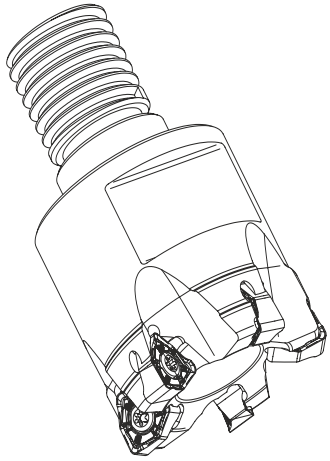

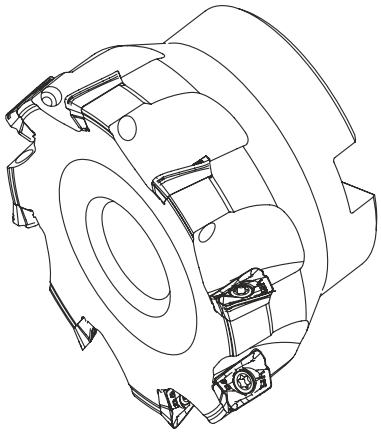

Milling inserts grades

Turning Grades		P Steel				M Stainless Steel			K Cast Iron			N Non-Ferrous		S Super Alloys		H Hard Materials	
		P10	P20	P30	P40	M10	M20	M30	K10	K20	K30	N10	N20	S10	S20	H5	H21
CVD	PC3115									PC3115							
PVD	PM2320			PC2320			PC2320			PC2320					PC2320		PC2320
PVD	PM2330		PM2330				PM2330			PM2330							
PVD	PC4025		PC4025				PC4025			PC4025							
PVD	PC4325		PC4325				PC4325								PC4325		PC4325
PVD	PC4525		PC4525				PC4525			PC4525							

Milling inserts grades

PC3115	K10-K30	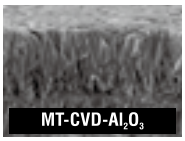	**Excellent Choice for Cast Iron** MT-CVD coated, the substrate with excellent hardness and stripping resistance in combination withAl_2O_3(thick) coating, the smooth surface of the tools, which is suitable for turning of cast iron at middle and high speed.
PM2320	P20-P40 M10-M30 K10-K30 S10-S20	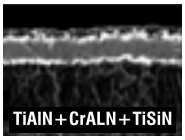	**Suitable for milling of ISO P, M, K materials** Especially for machining of materials with hardness 35-50 HRC with excellent wear resistence and toughness and latest multi-nano coatinggives excellent high temperature hardness.
PM2330	P20-P40 M20-M30 K10-K20	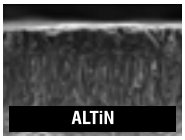	**Suitable for milling of ISO P, M materials** Especially for machining of materials with hardness upto 30 HRC the special proportion of matrix effectively improves the wear resistence and toughness and reduces the risk of breakage. Combined with latest nano coating the over-all performance is excellent in high feed milling
PC4025	P20-P40 M20-M30 K10-K20	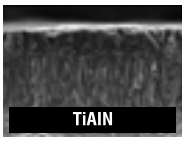	**Excellent Choice for General Machining** of ISO P, M, K materials 2-4um TiAlN PVD coated combinating with ultra fine particles substrates with high- toughness, suitable for all materials.
PC4325	P20-P40 M20-M30 K10-K20 S10-S20 H5-H21	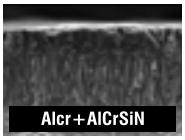	**Excellent choice for General Machining** of ISO P, M, H materials The latest AlCr + AlCrSiN PVD coatings, combined with ultra-fine particle substrates, has high wear resistance and excellent performance in finishing and semi-finishing of Steel, stainless and hardened steel
PC4525	P20-P40 M20-M30 K10-K20	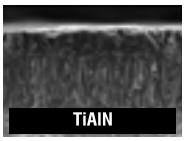	**Excellent Choice for General Machining of P, M, K materials** 2-4um TiAlN PVD coated combinating with ultra fine particles substrates with high- toughness, suitable for all materials, stainless steel, steel, cast alloy.

Overview of indexable milling cutters & inserts

Machining form	Series / Shape	Cutting edge angle	Applicable Inserts	Insert shape	Usage and features
Face milling cutter	**FMR 43.1**  Tool Diameter : Ø40 - Ø200	KAPR=43°	OD□□0605		• Light and fast in cutting, it is cost-effective with unilateral octagonal inserts; • It is suitable for face milling P, M, K and other materials.
	FMR 45.3  Tool Diameter : Ø50 - Ø160	KAPR=45°	SOMX1206ANR		• It is equipped with self-developed new structured groove inserts, ensuring both high machining efficiency and long service life. • It is suitable for machining P, M, K and other materials and the first choice for roughing.
	FMR 45.6  Tool Diameter : Ø63 - Ø250	KAPR=45°	ONMX0906ANSN-M		• Cost-effective face milling tool series • It has double-sided high strength hexagonal insert with 12 cutting edges.
	FMR 45.7  Tool Diameter : Ø50 - Ø160	KAPR=45°	ONGX0705		• Cost-effective face milling tools series • It has double-sided heptagon insert with 14 cutting edges.
	FMR 45.81 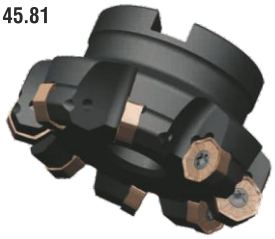 Tool Diameter : Ø63 - Ø200	KAPR=45°	ONMU0806		• Cost-effective face milling tools series • It has double-sided octogon insert with 16 cutting edges.
	FMR 45.7 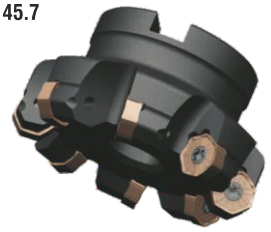 Tool Diameter : Ø40 - Ø125	KAPR=45°	ONHU0504		• Cost-effective face milling tools series • It has double-sided octogon insert with 16 cutting edges.

Overview of indexable milling cutters & inserts

Machining form	Series / Shape	Cutting edge angle	Applicable Inserts	Insert shape	Usage and features
Square shoulder milling cutter	**SMR 88.1**  Tool Diameter : Ø50 - Ø160	KAPR=88°	SOMX1206ANR		• Supported by grinding level / precision molded level quad-rilateral negative angle inserts, the cutting process proceeds stably. • It is suitable for general face milling of P, M, K and other materials, being both cost-effective and multi-functional
	SMR 90.3  Tool Diameter : Ø50 - Ø160	KAPR=90°	XNMU0403 XNMU0806		• Cost-effective shoulder milling cutter series. It has 6 edges on both sides. • The tool's locating is stable. As a result, the cutting process is reliable. • There are rod-shaped, sleeve-type cutterhead and replaceable tools for option.
	SSMR 90.3  Tool Diameter : Ø18 - Ø32	KAPR=90°			
High-feed milling cutter	**HFR 10.0**  Tool Diameter : Ø50 - Ø100		XDM12		• It is suitable for cavity milling and face milling of P, M, K and other materials, which can realize high Feed rate, and can also be used for insert milling. • The tool is available in diameters ϕ32-ϕ100mm.
	HFSR 10.0  Tool Diameter : Ø32 & Ø40				
	SFSR 20.1  Tool Diameter : Ø16 - Ø32		LOMX06		• It is suitable for cavity milling and face milling of P, M, K and other materials, which can realize high Feed rate, and can also be used for insert milling. • The tool is available in diameters ϕ16-ϕ32mm.

Overview of indexable milling inserts

Insert Shape	Insert Model
	ONMX0906ANSN-M
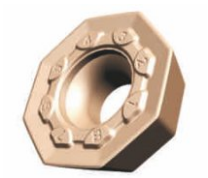	ODKT0605ADN ODMT060508-R
	XDMW1205ZTN
	ONGX0705ANN-R
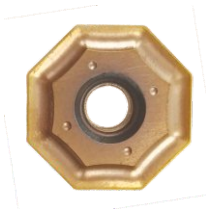	ONMU080608-PM

Insert Shape	Insert Model
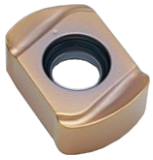	LOMX0603R-M
	XDMT1205ZTN-FM
	SOMX1206ANR-GM
	XNMU040308PNR-GM XNMU080608PR-GM
	ONHU050408-PM

FACEMILL

Promill 43.1

Entry Angle = 43°

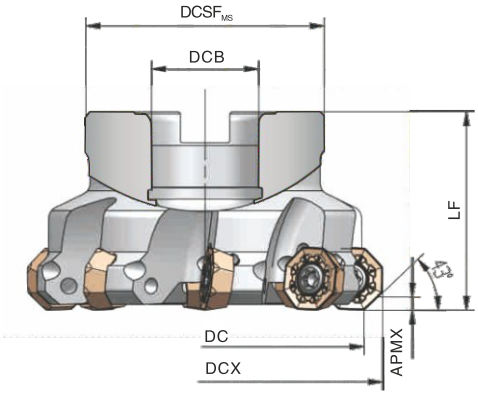

Tool Designation	Z	Dimenions in mm					AP MAX in mm	Arbor Form	Insert	Screw	Wrench	Inventory
		DC	DCB	DCSF	DCX	LF						
FMR43.1-040A1603-OD06	3	40	16	35	50	40	4	A	OD06	S05013	T20	○
FMR43.1-050A2204-OD06	4	50	22	42	60	40	4		OD06	S05013	T20	●
FMR43.1-063A2205-OD06	5	63	22	50	72	40	4		OD06	S05013	T20	●
FMR43.1-080A2206-OD06	6	80	22	60	90	50	4		OD06	S05013	T20	●
FMR43.1-100B3207-OD06	7	100	32	70	110	50	4	B	OD06	S05013	T20	●
FMR43.1-125B4008-OD06	8	125	40	85	135	63	4		OD06	S05013	T20	○
FMR43.1-160C4010-OD06	10	160	40	100	170	63	4	C	OD06	S05013	T20	○
FMR43.1-200C6012-OD06	12	200	60	175	210	63	4		OD06	S05013	T20	○

● Stock Item ○ Non-Stock Item

Inserts

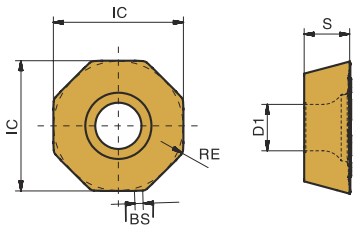

Inserts Designation	Feed Rate fz (mm/Z)	Dimenions in mm					AP MAX in (mm)	CVD	PVD				
		IC	S	D1	BS	RE		PC3115	PM2320	PM2330	PC4025	PC4325	PC4525
ODKX0605ADN	0.1 - 0.5	15.875	5.56	5.5	1.2	0.8	4		●	●			
ODMX060508-R	0.1 - 0.5	15.875	5.56	5.5	1.2	0.8	4		●	●			

● Stock Item ○ Non-Stock Item

Cutting Parameters								
Material Group			Vc (m/min)					
ISO	MG	Sub-Group	PC3115	PM2320	PM2330	PC4025	PC4325	PC4525
			Min - Max	Min - Max	Min - Max	Min - Max	Min - Max	Min - Max
P	P1 - P3	Low Carbon Steel	-	220-270-360	220-270-360	240-260-300	230-260-350	250-280-320
	P4 - P7	Medium -Alloyed Steel	-	180-240-350	180-240-350	200--220-280	170-250-330	220--250-280
	P8 - P12	High-Alloyed Steel	-	170-220-340	170-220-340	180-200-280	160-200-300	200-220-300
M	M1 - M3	Ferritic & Martensitic Steel	-	120-150-200	120-150-200	110-140-180	120-150-200	120-150-200
	M4 - M5	Austenitic Stainless Steel	-	120-150-200	120-150-200	110-160-180	120-150-200	120-150-200
K	K1 - K4	Grey Cast Iron	250-300-350	230-250-300	230-250-300	250-300-350	230-250-300	250-300-350
	K5 - K7	Ductile Iron	300-350-380	250-270-300	250-270-300	300-350-380	250-270-300	300-350-380
N	N1 - N11	Non-Ferrous Metals	-	-	-	-	-	-
S	S1 - S3	Titanium Alloys	-	80-120-150	80-120-150	-	70-130-160	-
	S11 - S13	Heat-Resistant Alloy	-	60-80-100	60-80-100	-	70-80-110	-
H	H5 - H21	Hard Materials	-	50-60-70	-	-	50-60-70	-

FACEMILL

Promill 45.3

Entry Angle = 45°

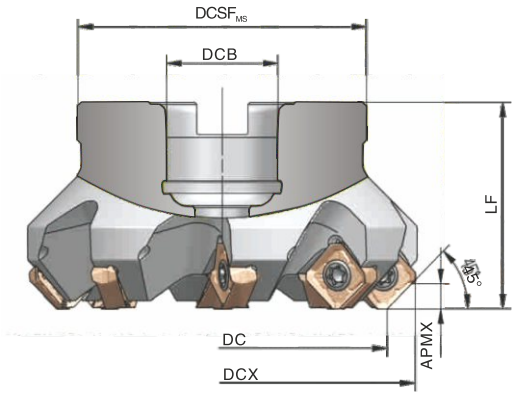

Tool Designation	Z	Dimenions in mm					AP MAX in mm	Arbor Form	Insert	Screw	Wrench	Inventory
		DC	DCB	DCSF	DCX	LF						
FMR45.3-050A2205-SO12	5	50	22	42	63.7	40	6	A	SOMX12	S04010	T15	●
FMR45.3-063A2206-SO12	6	63	22	50	76.7	40	6		SOMX12	S04010	T15	●
FMR45.3-080A2208-SO12	8	80	22	60	93.7	50	6		SOMX12	S04010	T15	●
FMR45.3-100B3210-SO12	10	100	32	70	113.7	50	6	B	SOMX12	S04010	T15	●
FMR45.3-125B4012-SO12	12	125	40	85	138.7	63	6		SOMX12	S04010	T15	○
FMR45.3-160A4014-SO12	14	160	40	100	173.7	63	6	C	SOMX12	S04010	T15	○

● Stock Item ○ Non-Stock Item

Inserts

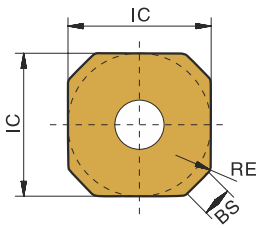

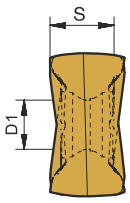

Inserts Designation	Feed Rate fz (mm/Z)	Dimenions in mm					AP MAX in (mm)	CVD	PVD				
		IC	S	D1	BS	RE		PC3115	PM2320	PM2330	PC4025	PC4325	PC4525
SOMX1206ANR-GM	0.1 - 0.5	13.4	6.0	4.6	1.4	0.8	6		●	●			

● Stock Item ○ Non-Stock Item

Cutting Parameters								
Material Group			Vc (m/min)					
ISO	MG	Sub-Group	PC3115	PM2320	PM2330	PC4025	PC4325	PC4525
			Min - Max	Min - Max	Min - Max	Min - Max	Min - Max	Min - Max
P	P1 - P3	Low Carbon Steel	-	220-270-360	220-270-360	240-260-300	230-260-350	250-280-320
	P4 - P7	Medium -Alloyed Steel	-	180-240-350	180-240-350	200--220-280	170-250-330	220--250-280
	P8 - P12	High-Alloyed Steel	-	170-220-340	170-220-340	180-200-280	160-200-300	200-220-300
M	M1 - M3	Ferritic & Martensitic Steel	-	120-150-200	120-150-200	110-140-180	120-150-200	120-150-200
	M4 - M5	Austenitic Stainless Steel	-	120-150-200	120-150-200	110-160-180	120-150-200	120-150-200
K	K1 - K4	Grey Cast Iron	250-300-350	230-250-300	230-250-300	250-300-350	230-250-300	250-300-350
	K5 - K7	Ductile Iron	300-350-380	250-270-300	250-270-300	300-350-380	250-270-300	300-350-380
N	N1 - N11	Non-Ferrous Metals	-	-	-	-	-	-
S	S1 - S3	Titanium Alloys	-	80-120-150	80-120-150	-	70-130-160	-
	S11 - S13	Heat-Resistant Alloy	-	60-80-100	60-80-100	-	70-80-110	-
H	H5 - H21	Hard Materials	-	50-60-70	-	-	50-60-70	-

FACEMILL

Promill 45.6

Entry Angle = 45°

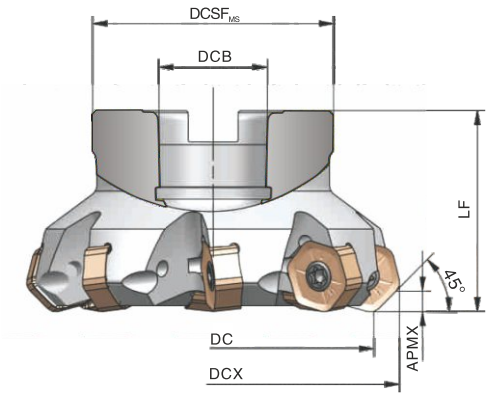

Tool Designation	Z	Dimenions in mm					AP MAX in mm	Arbor Form	Insert	Screw	Wrench	Inventory
		DC	DCB	DCSF	DCX	LF						
FMR45.6-063A2206-ON09	6	63	22	50	74.7	40	5	A	ONMX09	S04011	T15	●
FMR45.6-080A2708-ON09	8	80	27	60	91.7	50	5		ONMX09	S04011	T15	●
FMR45.6-100B3208-ON09	8	100	32	70	111.7	50	5	B	ONMX09	S04011	T15	●
FMR45.6-125B4008-ON09	8	125	40	85	136.7	63	5		ONMX09	S04011	T15	●
FMR45.6-160C4012-ON09	12	160	40	85	171.7	63	5	C	ONMX09	S04011	T15	○
FMR45.6-200C6010-ON09	10	200	60	100	211.7	63	5		ONMX09	S04011	T15	○
FMR45.6-250C6014-ON09	14	250	60	210	261.7	63	5		ONMX09	S04011	T15	○

● Stock Item ○ Non-Stock Item

Inserts

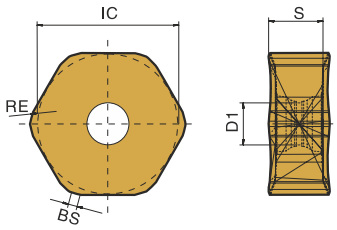

Inserts Designation	Feed Rate fz (mm/Z)	Dimenions in mm					AP MAX in (mm)	CVD	PVD				
		IC	S	D1	BS	RE		PC3115	PM2320	PM2330	PC4025	PC4325	PC4525
ONMX0906ANSN-M	0.1 - 0.5	16.5	6.34	4.9	1.0	1.2	5		●	●			

● Stock Item ○ Non-Stock Item

Cutting Parameters								
Material Group			Vc (m/min)					
ISO	MG	Sub-Group	PC3115	PM2320	PM2330	PC4025	PC4325	PC4525
			Min - Max	Min - Max	Min - Max	Min - Max	Min - Max	Min - Max
P	P1 - P3	Low Carbon Steel	-	220-270-360	220-270-360	240-260-300	230-260-350	250-280-320
	P4 - P7	Medium -Alloyed Steel	-	180-240-350	180-240-350	200--220-280	170-250-330	220--250-280
	P8 - P12	High-Alloyed Steel	-	170-220-340	170-220-340	180-200-280	160-200-300	200-220-300
M	M1 - M3	Ferritic & Martensitic Steel	-	120-150-200	120-150-200	110-140-180	120-150-200	120-150-200
	M4 - M5	Austenitic Stainless Steel	-	120-150-200	120-150-200	110-160-180	120-150-200	120-150-200
K	K1 - K4	Grey Cast Iron	250-300-350	230-250-300	230-250-300	250-300-350	230-250-300	250-300-350
	K5 - K7	Ductile Iron	300-350-380	250-270-300	250-270-300	300-350-380	250-270-300	300-350-380
N	N1 - N11	Non-Ferrous Metals	-	-	-	-	-	-
S	S1 - S3	Titanium Alloys	-	80-120-150	80-120-150	-	70-130-160	-
	S11 - S13	Heat-Resistant Alloy	-	60-80-100	60-80-100	-	70-80-110	-
H	H5 - H21	Hard Materials	-	50-60-70	-	-	50-60-70	-

FACEMILL

Promill 45.7

Entry Angle = 45°

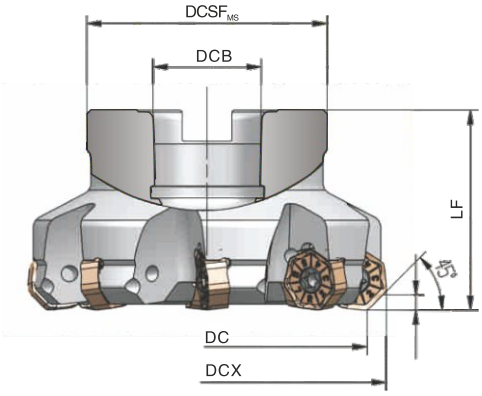

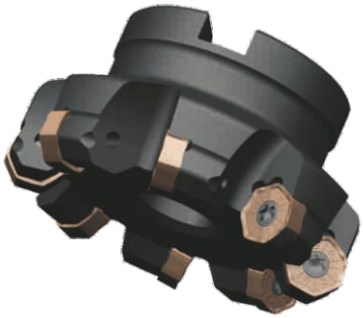

Tool Designation	Z	Dimenions in mm					AP MAX in mm	Arbor Form	Insert	Screw	Wrench	Inventory
		DC	DCB	DCSF	DCX	LF						
FMR45.7-050A2204-ON07	4	50	22	42	59.6	40	4.0	A	ONGX07	S035010	T15	●
FMR45.7-063A2205-ON07	5	63	22	50	72.6	40	4.0		ONGX07	S035010	T15	●
FMR45.7-080A2707-ON07	7	80	27	60	89.6	50	4.0		ONGX07	S035010	T15	●
FMR45.7-100B3208-ON07	8	100	32	70	109.6	50	4.0	B	ONGX07	S035010	T15	○
FMR45.7-125B4010-ON07	10	125	40	85	134.6	63	4.0		ONGX07	S035010	T15	○
FMR45.7-160C4012-ON07	12	160	40	100	169.6	63	4.0	C	ONGX07	S035010	T15	○

● Stock Item ○ Non-Stock Item

Inserts

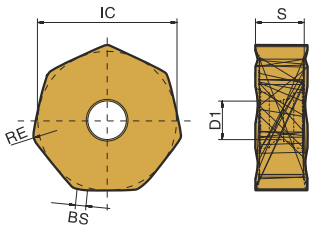

Inserts Designation	Feed Rate fz (mm/Z)	Dimenions in mm					AP MAX in (mm)	CVD	PVD				
		IC	S	D1	BS	RE		PC3115	PM2320	PM2330	PC4025	PC4325	PC4525
ONGX0705ANN-R	0.1 - 0.3	14.5	5.02	4.0	1.0	0.8	4.0		●	●			

● Stock Item ○ Non-Stock Item

Cutting Parameters								
Material Group			Vc (m/min)					
ISO	MG	Sub-Group	PC3115	PM2320	PM2330	PC4025	PC4325	PC4525
			Min - Max	Min - Max	Min - Max	Min - Max	Min - Max	Min - Max
P	P1 - P3	Low Carbon Steel	-	220-270-360	220-270-360	240-260-300	230-260-350	250-280-320
	P4 - P7	Medium -Alloyed Steel	-	180-240-350	180-240-350	200--220-280	170-250-330	220--250-280
	P8 - P12	High-Alloyed Steel	-	170-220-340	170-220-340	180-200-280	160-200-300	200-220-300
M	M1 - M3	Ferritic & Martensitic Steel	-	120-150-200	120-150-200	110-140-180	120-150-200	120-150-200
	M4 - M5	Austenitic Stainless Steel	-	120-150-200	120-150-200	110-160-180	120-150-200	120-150-200
K	K1 - K4	Grey Cast Iron	250-300-350	230-250-300	230-250-300	250-300-350	230-250-300	250-300-350
	K5 - K7	Ductile Iron	300-350-380	250-270-300	250-270-300	300-350-380	250-270-300	300-350-380
N	N1 - N11	Non-Ferrous Metals	-	-	-	-	-	-
S	S1 - S3	Titanium Alloys	-	80-120-150	80-120-150	-	70-130-160	-
	S11 - S13	Heat-Resistant Alloy	-	60-80-100	60-80-100	-	70-80-110	-
H	H5 - H21	Hard Materials	-	50-60-70	-	-	50-60-70	-

FACEMILL

Promill 45.8

Entry Angle = 45°

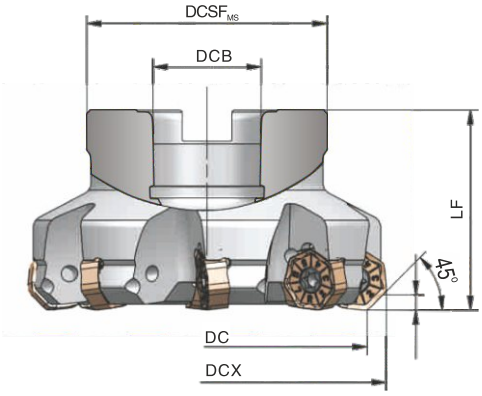

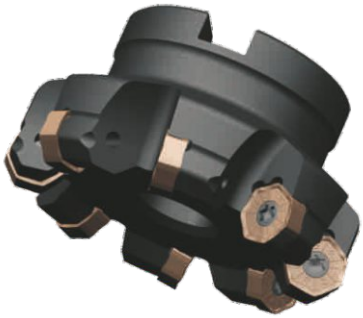

Tool Designation	Z	Dimenions in mm					AP MAX in mm	Arbor Form	Insert	Screw	Wrench	Inventory
		DC	DCB	DCSF	DCX	LF						
FMR45.8-063A2206-ON08	6	63	22	50	74.7	40	5	A	ONMU08	S05012	T20	●
FMR45.8-080A2708-ON08	8	80	27	60	91.7	50	5		ONMU08	S05012	T20	●
FMR45.8-100B3208-ON08	8	100	32	70	111.7	50	5	B	ONMU08	S05012	T20	●
FMR45.8-125B4008-ON08	8	125	40	85	136.7	63	5		ONMU08	S05012	T20	○
FMR45.8-160C4012-ON08	12	160	40	85	171.7	63	5	C	ONMU08	S05012	T20	○
FMR45.8-200C6014-ON08	14	200	60	100	211.7	63	5		ONMU08	S05012	T20	○

● Stock Item ○ Non-Stock Item

Inserts

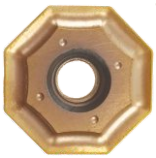

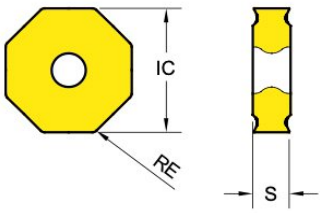

Inserts Designation	Feed Rate fz (mm/Z)	Dimenions in mm					AP MAX in (mm)	CVD	PVD				
		IC	S	D1	BS	RE		PC3115	PM2320	PM2330	PC4025	PC4325	PC4525
ONMU080608-PM	0.1 - 0.5	20.2	5.80			0.8	5.0	●			●	●	

● Stock Item ○ Non-Stock Item

Cutting Parameters								
Material Group			Vc (m/min)					
ISO	MG	Sub-Group	PC3115	PM2320	PM2330	PC4025	PC4325	PC4525
			Min - Max	Min - Max	Min - Max	Min - Max	Min - Max	Min - Max
P	P1 - P3	Low Carbon Steel	-	220-270-360	220-270-360	240-260-300	230-260-350	250-280-320
	P4 - P7	Medium -Alloyed Steel	-	180-240-350	180-240-350	200--220-280	170-250-330	220--250-280
	P8 - P12	High-Alloyed Steel	-	170-220-340	170-220-340	180-200-280	160-200-300	200-220-300
M	M1 - M3	Ferritic & Martensitic Steel	-	120-150-200	120-150-200	110-140-180	120-150-200	120-150-200
	M4 - M5	Austenitic Stainless Steel	-	120-150-200	120-150-200	110-160-180	120-150-200	120-150-200
K	K1 - K4	Grey Cast Iron	250-300-350	230-250-300	230-250-300	250-300-350	230-250-300	250-300-350
	K5 - K7	Ductile Iron	300-350-380	250-270-300	250-270-300	300-350-380	250-270-300	300-350-380
N	N1 - N11	Non-Ferrous Metals	-	-	-	-	-	-
S	S1 - S3	Titanium Alloys	-	80-120-150	80-120-150	-	70-130-160	-
	S11 - S13	Heat-Resistant Alloy	-	60-80-100	60-80-100	-	70-80-110	-
H	H5 - H21	Hard Materials	-	50-60-70	-	-	50-60-70	-

FACEMILL

Promill 45.81

Entry Angle = 45°

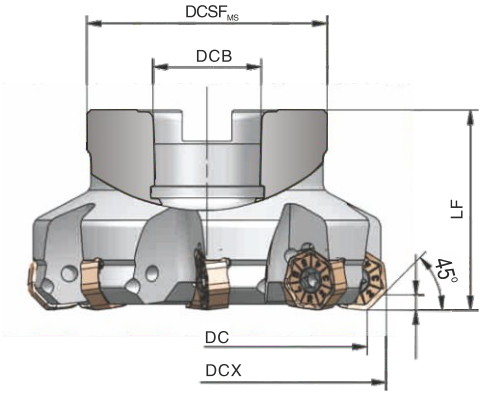

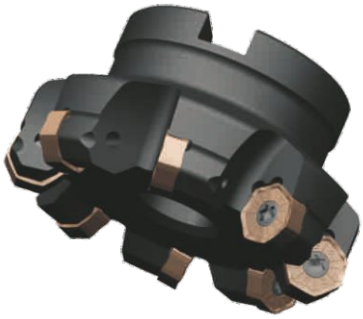

Tool Designation	Z	Dimenions in mm					AP MAX in mm	Arbor Form	Insert	Screw	Wrench	Inventory
		DC	DCB	DCSF	DCX	LF						
FMR45.81-040A1604-ON05	4	40	16	35	50	40	3	A	ONHU05	S03080	T10	●
FMR45.81-050A2204-ON05	4	50	22	47	60	40	3		ONHU05	S03080	T10	●
FMR45.81-063A2205-ON05	5	63	22	47	72	40	3		ONHU05	S03080	T10	●
FMR45.81-080A2706-ON05	6	80	27	62	90	50	3		ONHU05	S03080	T10	○
FMR45.81-100B3207-ON05	7	100	32	77	110	50	3	B	ONHU05	S03080	T10	○
FMR45.81-125B4008-ON05	8	125	40	90	135	63	3		ONHU05	S03080	T10	○

● Stock Item ○ Non-Stock Item

Inserts

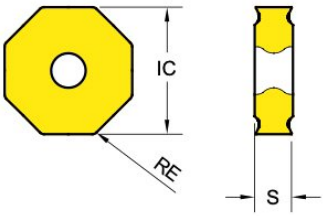

Inserts Designation	Feed Rate fz (mm/Z)	Dimenions in mm					AP MAX in (mm)	CVD	PVD				
		IC	S	D1	BS	RE		PC3115	PM2320	PM2330	PC4025	PC4325	PC4525
ONHU050408-PM	0.1 - 0.3	12	4.0		1.0	0.8	3	●			●	○	

● Stock Item ○ Non-Stock Item

Cutting Parameters								
Material Group			Vc (m/min)					
ISO	MG	Sub-Group	PC3115	PM2320	PM2330	PC4025	PC4325	PC4525
			Min - Max	Min - Max	Min - Max	Min - Max	Min - Max	Min - Max
P	P1 - P3	Low Carbon Steel	-	220-270-360	220-270-360	240-260-300	230-260-350	250-280-320
	P4 - P7	Medium -Alloyed Steel	-	180-240-350	180-240-350	200--220-280	170-250-330	220--250-280
	P8 - P12	High-Alloyed Steel	-	170-220-340	170-220-340	180-200-280	160-200-300	200-220-300
M	M1 - M3	Ferritic & Martensitic Steel	-	120-150-200	120-150-200	110-140-180	120-150-200	120-150-200
	M4 - M5	Austenitic Stainless Steel	-	120-150-200	120-150-200	110-160-180	120-150-200	120-150-200
K	K1 - K4	Grey Cast Iron	250-300-350	230-250-300	230-250-300	250-300-350	230-250-300	250-300-350
	K5 - K7	Ductile Iron	300-350-380	250-270-300	250-270-300	300-350-380	250-270-300	300-350-380
N	N1 - N11	Non-Ferrous Metals	-	-	-	-	-	-
S	S1 - S3	Titanium Alloys	-	80-120-150	80-120-150	-	70-130-160	-
	S11 - S13	Heat-Resistant Alloy	-	60-80-100	60-80-100	-	70-80-110	-
H	H5 - H21	Hard Materials	-	50-60-70	-	-	50-60-70	-

SHOULDER MILLING

Promill 88.1

Entry Angle = 88°

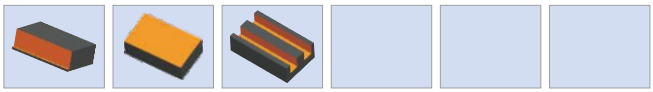

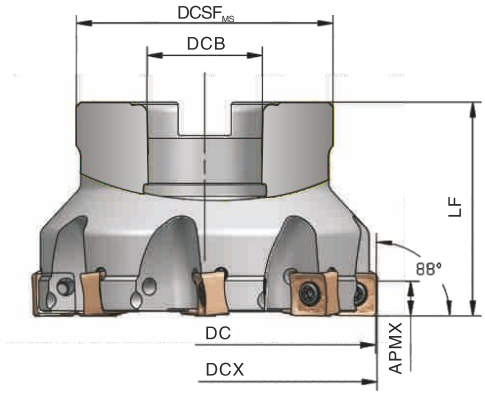

Tool Designation	Z	Dimenions in mm					AP MAX in mm	Arbor Form	Insert	Screw	Wrench	Inventory
		DC	DCB	DCSF	DCX	LF						
SMR88.1-050A2205-SO12	5	50	22	42	63.7	40	6	A	SOMX12	S04010	T15	●
SMR88.1-063A2206-SO12	6	63	22	50	76.7	40	6		SOMX12	S04010	T15	●
SMR88.1-080A2208-SO12	8	80	22	60	93.7	50	6		SOMX12	S04010	T15	●
SMR88.1-100B3210-SO12	10	100	32	70	113.7	50	6	B	SOMX12	S04010	T15	○
SMR88.1-125B4012-SO12	12	125	40	85	138.7	63	6		SOMX12	S04010	T15	○
SMR88.1-160A4014-SO12	14	160	40	100	173.7	63	6	C	SOMX12	S04010	T15	○

● Stock Item ○ Non-Stock Item

Inserts

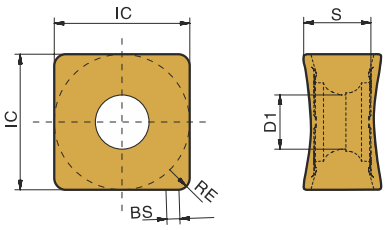

Inserts Designation	Feed Rate fz (mm/Z)	Dimenions in mm					AP MAX in (mm)	CVD	PVD				
		IC	S	D1	BS	RE		PC3115	PM2320	PM2330	PC4025	PC4325	PC4525
SOMX1206ANR-GM	0.1 - 0.5	13.4	6.0	4.6	1.4	0.8	3		●	●			

● Stock Item ○ Non-Stock Item

Cutting Parameters								
Material Group			Vc (m/min)					
ISO	MG	Sub-Group	PC3115	PM2320	PM2330	PC4025	PC4325	PC4525
			Min - Max	Min - Max	Min - Max	Min - Max	Min - Max	Min - Max
P	P1 - P3	Low Carbon Steel	-	220-270-360	220-270-360	240-260-300	230-260-350	250-280-320
	P4 - P7	Medium -Alloyed Steel	-	180-240-350	180-240-350	200--220-280	170-250-330	220--250-280
	P8 - P12	High-Alloyed Steel	-	170-220-340	170-220-340	180-200-280	160-200-300	200-220-300
M	M1 - M3	Ferritic & Martensitic Steel	-	120-150-200	120-150-200	110-140-180	120-150-200	120-150-200
	M4 - M5	Austenitic Stainless Steel	-	120-150-200	120-150-200	110-160-180	120-150-200	120-150-200
K	K1 - K4	Grey Cast Iron	250-300-350	230-250-300	230-250-300	250-300-350	230-250-300	250-300-350
	K5 - K7	Ductile Iron	300-350-380	250-270-300	250-270-300	300-350-380	250-270-300	300-350-380
N	N1 - N11	Non-Ferrous Metals	-	-	-	-	-	-
S	S1 - S3	Titanium Alloys	-	80-120-150	80-120-150	-	70-130-160	-
	S11 - S13	Heat-Resistant Alloy	-	60-80-100	60-80-100	-	70-80-110	-
H	H5 - H21	Hard Materials	-	50-60-70	-	-	50-60-70	-

SHOULDER MILLING

Promill 90.3

Entry Angle = 90°

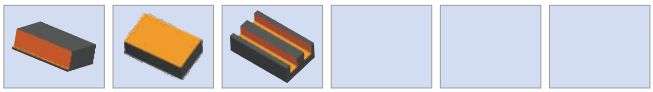

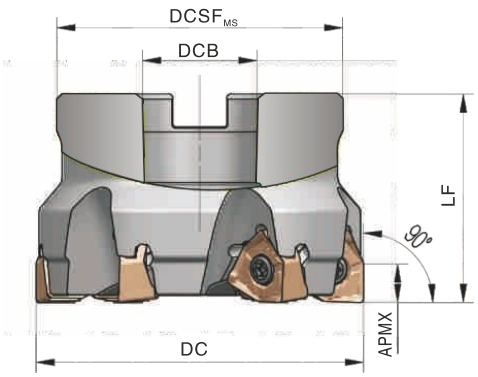

Tool Designation	Z	Dimenions in mm				AP MAX in mm	Arbor Form	Insert	Screw	Wrench	Inventory
		DC	DCB	DCSF	LF						
SMR90.3.-050A2204-XN08	4	50	22	42	40	7	A	XNMU08	S040084	T15	●
SMR90.3.-063A2706-XN08	6	63	27	50	40	7		XNMU08	S040084	T15	●
SMR90.3.-080A2706-XN08	6	80	27	60	50	7		XNMU08	S040084	T15	●
SMR90.3.-100A3207-XN08	7	100	32	70	50	7		XNMU08	S040084	T15	○
SMR90.3.-125B4008-XN08	8	125	40	85	63	7	B	XNMU08	S040084	T15	○
SMR90.3.-160C4012-XN08	12	160	40	100	63	7	C	XNMU08	S040084	T15	○

● Stock Item ○ Non-Stock Item

Inserts

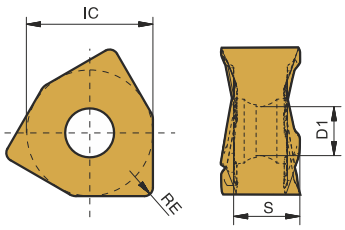

Inserts Designation	Feed Rate fz (mm/Z)	Dimenions in mm					AP MAX in (mm)	CVD	PVD				
		IC	S	D1	BS	RE		PC3115	PM2320	PM2330	PC4025	PC4325	PC4525
XNMU080608-GM	0.1 - 0.5	12	6.35	4.6		0.8	7		●	●			

● Stock Item ○ Non-Stock Item

Cutting Parameters								
Material Group			Vc (m/min)					
ISO	MG	Sub-Group	PC3115	PM2320	PM2330	PC4025	PC4325	PC4525
			Min - Max	Min - Max	Min - Max	Min - Max	Min - Max	Min - Max
P	P1 - P3	Low Carbon Steel	-	220-270-360	220-270-360	240-260-300	230-260-350	250-280-320
	P4 - P7	Medium -Alloyed Steel	-	180-240-350	180-240-350	200--220-280	170-250-330	220--250-280
	P8 - P12	High-Alloyed Steel	-	170-220-340	170-220-340	180-200-280	160-200-300	200-220-300
M	M1 - M3	Ferritic & Martensitic Steel	-	120-150-200	120-150-200	110-140-180	120-150-200	120-150-200
	M4 - M5	Austenitic Stainless Steel	-	120-150-200	120-150-200	110-160-180	120-150-200	120-150-200
K	K1 - K4	Grey Cast Iron	250-300-350	230-250-300	230-250-300	250-300-350	230-250-300	250-300-350
	K5 - K7	Ductile Iron	300-350-380	250-270-300	250-270-300	300-350-380	250-270-300	300-350-380
N	N1 - N11	Non-Ferrous Metals	-	-	-	-	-	-
S	S1 - S3	Titanium Alloys	-	80-120-150	80-120-150	-	70-130-160	-
	S11 - S13	Heat-Resistant Alloy	-	60-80-100	60-80-100	-	70-80-110	-
H	H5 - H21	Hard Materials	-	50-60-70	-	-	50-60-70	-

SHOULDER MILLING

Promill 90.3

Entry Angle = 90°

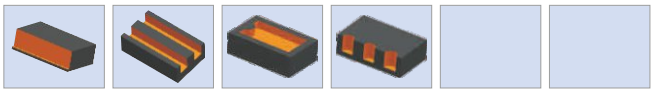

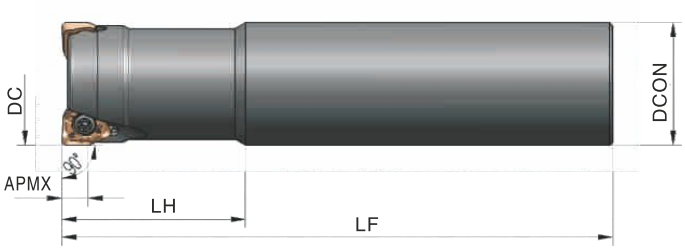

Tool Designation	Z	Dimenions in mm				AP MAX in mm	Insert	Screw	Wrench	Inventory
		DC	DCON	LF	LH					
SSMR90.3-0181615002-XN04	2	18	18	150	30	3	XNMU04	S025065	T08	●
SSMR90.3-0202015002-XN04	2	20	20	150	30	3	XNMU04	S025065	T08	●
SSMR90.3-0202015003-XN04	3	20	20	150	30	3	XNMU04	S025065	T08	●
SSMR90.3-0252517003-XN04	3	25	25	170	30	3	XNMU04	S025065	T08	●
SSMR90.3-0252517004-XN04	4	25	25	170	30	3	XNMU04	S025065	T08	○
SSMR90.3-0323217004-XN04	4	32	32	170	30	3	XNMU04	S025065	T08	○
SSMR90.3-0323217005-XN04	5	32	32	170	30	3	XNMU04	S025065	T08	○

● Stock Item ○ Non-Stock Item

Inserts

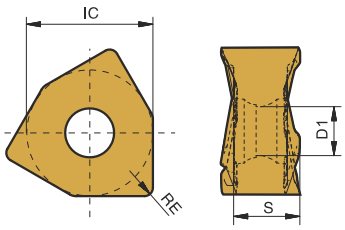

Inserts Designation	Feed Rate fz (mm/Z)	Dimenions in mm					AP MAX in (mm)	CVD	PVD				
		IC	S	D1	BS	RE		PC3115	PM2320	PM2330	PC4025	PC4325	PC4525
XNMU040308PNR-GM	0.1 - 0.5	7	3.65	2.8		0.8	3		●	●			

● Stock Item ○ Non-Stock Item

Cutting Parameters								
Material Group			Vc (m/min)					
ISO	MG	Sub-Group	PC3115	PM2320	PM2330	PC4025	PC4325	PC4525
			Min - Max	Min - Max	Min - Max	Min - Max	Min - Max	Min - Max
P	P1 - P3	Low Carbon Steel	-	220-270-360	220-270-360	240-260-300	230-260-350	250-280-320
	P4 - P7	Medium -Alloyed Steel	-	180-240-350	180-240-350	200--220-280	170-250-330	220--250-280
	P8 - P12	High-Alloyed Steel	-	170-220-340	170-220-340	180-200-280	160-200-300	200-220-300
M	M1 - M3	Ferritic & Martensitic Steel	-	120-150-200	120-150-200	110-140-180	120-150-200	120-150-200
	M4 - M5	Austenitic Stainless Steel	-	120-150-200	120-150-200	110-160-180	120-150-200	120-150-200
K	K1 - K4	Grey Cast Iron	250-300-350	230-250-300	230-250-300	250-300-350	230-250-300	250-300-350
	K5 - K7	Ductile Iron	300-350-380	250-270-300	250-270-300	300-350-380	250-270-300	300-350-380
N	N1 - N11	Non-Ferrous Metals	-	-	-	-	-	-
S	S1 - S3	Titanium Alloys	-	80-120-150	80-120-150	-	70-130-160	-
	S11 - S13	Heat-Resistant Alloy	-	60-80-100	60-80-100	-	70-80-110	-
H	H5 - H21	Hard Materials	-	50-60-70	-	-	50-60-70	-

HI FEED MILLING

Promill 10.0

Entry Angle = 10°

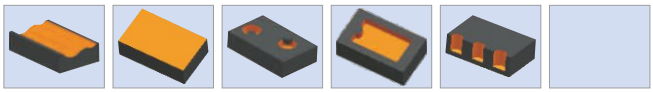

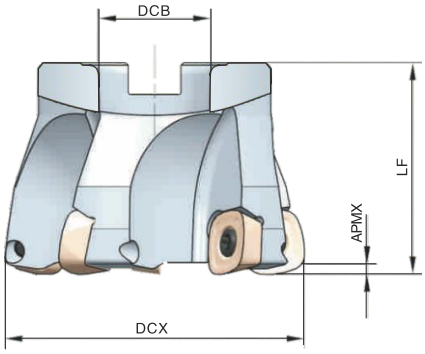

Tool Designation	Z	Dimenions in mm				AP MAX in mm	Arbor Form	Insert	Screw	Wrench	Inventory
		DC	DCB	LF	LH						
HFR10.0-050A2204-XD12	4	50	22	40		2.3	A	XDMT12	S050013	T20	○
HFR10.0-063A2705-XD12	6	63	27	50		2.3		XDMT12	S050013	T20	○
HFR10.0-080A2706-XD12	6	80	27	50		2.3		XDMT12	S050013	T20	○
HFR10.0-100B3206-XD12	7	100	32	50		2.3		XDMT12	S050013	T20	○

● Stock Item ○ Non-Stock Item

Inserts

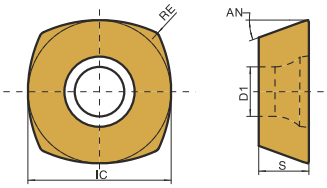

Inserts Designation	Feed Rate fz (mm/Z)	Dimenions in mm					AP MAX in (mm)	CVD	PVD				
		IC	S	D1	AN	RE		PC3115	PM2320	PM2330	PC4025	PC4325	PC4525
XDMT1205ZXN-ME	0.1 - 0.6	12.7	5.56	4.6	15	3	2.3		●	●			
XDMW1205ZXN	0.1 - 0.6	12.7	5.56	4.6	15	3	2.3		○	○			

● Stock Item ○ Non-Stock Item

Cutting Parameters								
Material Group			Vc (m/min)					
ISO	MG	Sub-Group	PC3115	PM2320	PM2330	PC4025	PC4325	PC4525
			Min - Max	Min - Max	Min - Max	Min - Max	Min - Max	Min - Max
P	P1 - P3	Low Carbon Steel	-	220-270-360	220-270-360	240-260-300	230-260-350	250-280-320
	P4 - P7	Medium -Alloyed Steel	-	180-240-350	180-240-350	200--220-280	170-250-330	220--250-280
	P8 - P12	High-Alloyed Steel	-	170-220-340	170-220-340	180-200-280	160-200-300	200-220-300
M	M1 - M3	Ferritic & Martensitic Steel	-	120-150-200	120-150-200	110-140-180	120-150-200	120-150-200
	M4 - M5	Austenitic Stainless Steel	-	120-150-200	120-150-200	110-160-180	120-150-200	120-150-200
K	K1 - K4	Grey Cast Iron	250-300-350	230-250-300	230-250-300	250-300-350	230-250-300	250-300-350
	K5 - K7	Ductile Iron	300-350-380	250-270-300	250-270-300	300-350-380	250-270-300	300-350-380
N	N1 - N11	Non-Ferrous Metals	-	-	-	-	-	-
S	S1 - S3	Titanium Alloys	-	80-120-150	80-120-150	-	70-130-160	-
	S11 - S13	Heat-Resistant Alloy	-	60-80-100	60-80-100	-	70-80-110	-
H	H5 - H21	Hard Materials	-	50-60-70	-	-	50-60-70	-

HI FEED MILLING

Promill 10.0

Entry Angle = 10°

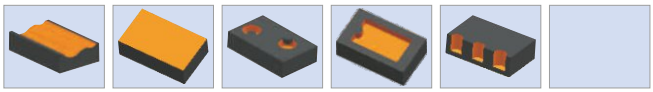

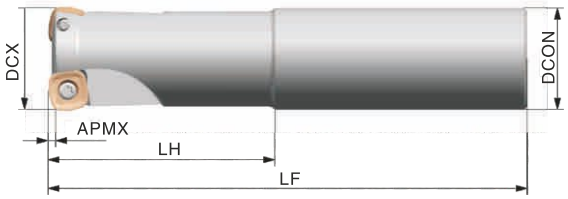

Tool Designation	Z	Dimenions in mm				AP MAX in mm	Insert	Screw	Wrench	Inventory
		DC	DCON	LF	LH					
HFSR10.0-0323215002-XD12	2	32	32	150	70	2.3	XDMT12	S400013	T20	○
HFSR10.0-0404015003-XD12	3	40	40	150	70	2.3	XDMT12	S400013	T20	○

● Stock Item ○ Non-Stock Item

Inserts

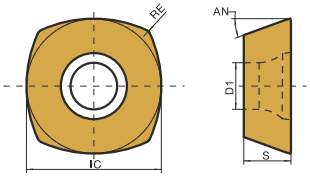

Inserts Designation	Feed Rate fz (mm/Z)	Dimenions in mm					AP MAX in (mm)	CVD	PVD				
		IC	S	D1	AN	RE		PC3115	PM2320	PM2330	PC4025	PC4325	PC4525
XDMT1205ZXN-ME	0.3-1.6	12.7	5.56	4.6	15	3	2.3		●	●			
XDMW1205ZXN	0.3-1.6	12.7	5.56	4.6	15	3	2.3		○	○			

● Stock Item ○ Non-Stock Item

Cutting Parameters								
Material Group			Vc (m/min)					
ISO	MG	Sub-Group	PC3115	PM2320	PM2330	PC4025	PC4325	PC4525
			Min - Max	Min - Max	Min - Max	Min - Max	Min - Max	Min - Max
P	P1 - P3	Low Carbon Steel	-	220-270-360	220-270-360	240-260-300	230-260-350	250-280-320
	P4 - P7	Medium -Alloyed Steel	-	180-240-350	180-240-350	200--220-280	170-250-330	220--250-280
	P8 - P12	High-Alloyed Steel	-	170-220-340	170-220-340	180-200-280	160-200-300	200-220-300
M	M1 - M3	Ferritic & Martensitic Steel	-	120-150-200	120-150-200	110-140-180	120-150-200	120-150-200
	M4 - M5	Austenitic Stainless Steel	-	120-150-200	120-150-200	110-160-180	120-150-200	120-150-200
K	K1 - K4	Grey Cast Iron	250-300-350	230-250-300	230-250-300	250-300-350	230-250-300	250-300-350
	K5 - K7	Ductile Iron	300-350-380	250-270-300	250-270-300	300-350-380	250-270-300	300-350-380
N	N1 - N11	Non-Ferrous Metals	-	-	-	-	-	-
S	S1 - S3	Titanium Alloys	-	80-120-150	80-120-150	-	70-130-160	-
	S11 - S13	Heat-Resistant Alloy	-	60-80-100	60-80-100	-	70-80-110	-
H	H5 - H21	Hard Materials	-	50-60-70	-	-	50-60-70	-

HI FEED MILLING

Promill 20.1

Entry Angle = 20°

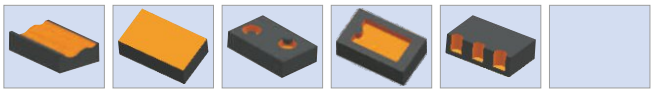

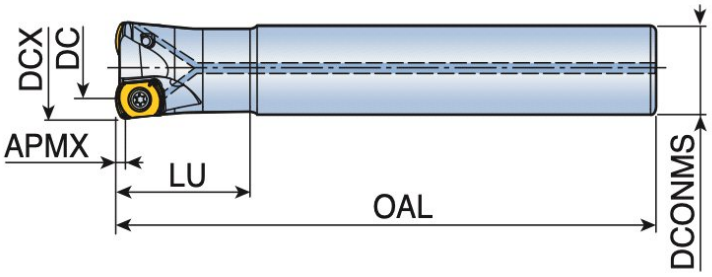

Tool Designation	Z	Dimenions in mm				AP MAX in mm	Insert	Screw	Wrench	Inventory
		DCX	DCONMS	LF	LH					
HFSR20.1-0161615002-LO06	2	16	16	150	40	1.0	LOMX06	S025065	T08	●
HFSR20.1-0161610002-LO06	2	16	16	100	30	1.0	LOMX06	S025065	T08	●
HFSR20.1-0202015002-LO06	2	20	20	150	40	1.0	LOMX06	S025065	T08	●
HFSR20.1-0202015003-LO06	3	20	20	150	40	1.0	LOMX06	S025065	T08	●
HFSR20.1-0252515003-LO06	3	25	25	150	40	1.0	LOMX06	S025065	T08	●
HFSR20.1-0252515004-LO06	4	25	25	150	40	1.0	LOMX06	S025065	T08	●
HFSR20.1-0323215004-LO06	4	32	32	150	40	1.0	LOMX06	S025065	T08	○
HFSR20.1-0323215005-LO06	5	32	32	150	40	1.0	LOMX06	S025065	T08	○

● Stock Item ○ Non-Stock Item

Inserts

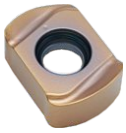

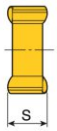

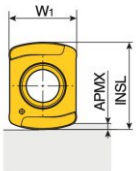

Inserts Designation	Feed Rate fz (mm/Z)	Dimenions in mm					AP MAX in (mm)	CVD	PVD				
		IC	S	D1	W1	RE		PC3115	PM2320	PM2330	PC4025	PC4325	PC4525
LOMX0603R-M	0.3-1.6	9	3.73		4.2		1.0				●	●	

● Stock Item ○ Non-Stock Item

Cutting Parameters								
Material Group			Vc (m/min)					
ISO	MG	Sub-Group	PC3115	PM2320	PM2330	PC4025	PC4325	PC4525
			Min - Max	Min - Max	Min - Max	Min - Max	Min - Max	Min - Max
P	P1 - P3	Low Carbon Steel	-	220-270-360	220-270-360	240-260-300	230-260-350	250-280-320
	P4 - P7	Medium -Alloyed Steel	-	180-240-350	180-240-350	200--220-280	170-250-330	220--250-280
	P8 - P12	High-Alloyed Steel	-	170-220-340	170-220-340	180-200-280	160-200-300	200-220-300
M	M1 - M3	Ferritic & Martensitic Steel	-	120-150-200	120-150-200	110-140-180	120-150-200	120-150-200
	M4 - M5	Austenitic Stainless Steel	-	120-150-200	120-150-200	110-160-180	120-150-200	120-150-200
K	K1 - K4	Grey Cast Iron	250-300-350	230-250-300	230-250-300	250-300-350	230-250-300	250-300-350
	K5 - K7	Ductile Iron	300-350-380	250-270-300	250-270-300	300-350-380	250-270-300	300-350-380
N	N1 - N11	Non-Ferrous Metals	-	-	-	-	-	-
S	S1 - S3	Titanium Alloys	-	80-120-150	80-120-150	-	70-130-160	-
	S11 - S13	Heat-Resistant Alloy	-	60-80-100	60-80-100	-	70-80-110	-
H	H5 - H21	Hard Materials	-	50-60-70	-	-	50-60-70	-

Straight ramping

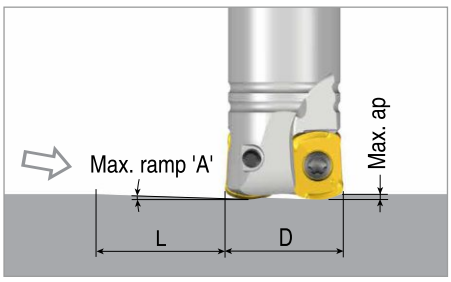

Helical ramping

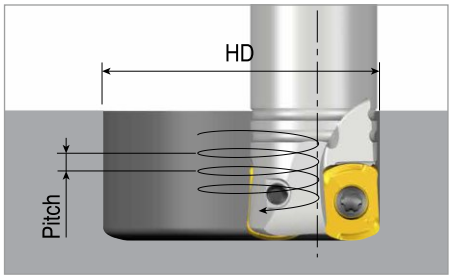

LOMX06 (Unit : mm)

Cutter dia.(D)	Straight ramp down			Helical ramp down		
	Max. ramp (A°)	Max. ap	Min. length (L)	Min. dia.(HD)	Max. dia.(HD)	Max. pitch/rev.
Ø16	2.0	0.7	13	23		0.7
					32	0.7
Ø20	1.5	1.0	38	31		0.8
					40	1.0
Ø25	1.3	1.0	41	41		1.0
					50	1.0
Ø32	0.9	1.0	57	55		1.0
					64	1.0

Programming Technical Data

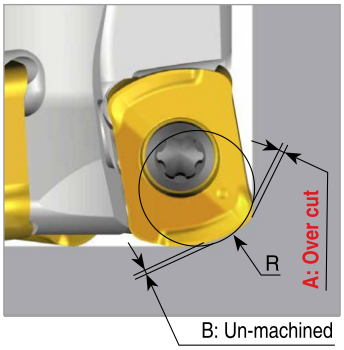

	R Program	A Over cut	B Un-machined
LOMX06 (Ø16, Ø17, Ø18)	1.5	0	0.35
	2.0	0.1	0.22
	2.5	0.27	0.1
LOMX06 (Ø20-)	2.0	0	0.42
	2.5	0.12	0.26
	3.0	0.29	0.17

: Recommended program 'R'

Precautions for drill-milling

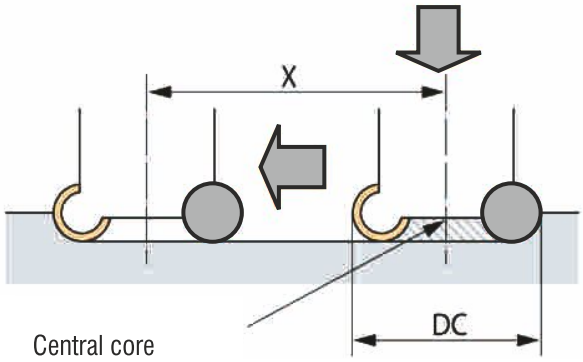

When transverse feed machining after drill-milling:

- The feed rate of the table should be reduced to that of half of the general horizontal machining until the central section is completely removed.
- The cutting length minimum X for flattening the bottom is shown in the table above.

Precautions for ramp milling

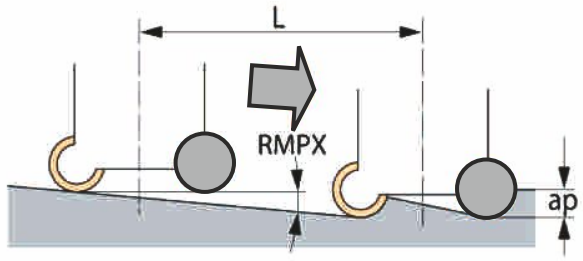

Please set the angle of machining below RMPX.
Set the feed rate below 70% of the standard.

Precautions for helical machining

- Please set the feed rate per revolution of the helical machining below the cutting depth ap maximum.
- The axial angle created by the trajectory of the tool center should not exceed the inclination angle RMPX maximum for machining.
- Set the feed rate below 70% of the standard.

Recommended maximum cutting depth (ap) and applicable teeth number

Teeth number of cutter head	R08	R10	R12	R16	R20
≤3	ap=2.0-4.0mm	ap=2.5-5.0 mm	ap=3.0-6.0 mm	ap=4.0-8.0 mm	ap=5.0-10.0 mm
>3	ap<2.0 mm	ap<2.5 mm	ap<6.0 mm	ap<4.0 mm	ap<5.0 mm

Recommended cutting parameters

Workpiece material		Hardness (HB)	Cutting speed vc (m/min)	Ø20 / Ø25		Ø30 / Ø35		Ø40	
				Axial cutting depth (mm)	Feed rate per tooth (mm)	Axial cutting depth (mm)	Feed rate per tooth (mm)	Axial cutting depth (mm)	Feed rate per tooth (mm)
P	Low-carbon steel, mild steel	<180	200 (120-220)	0.3-1.5	0.6-1.2	0.3-1.2	0.5-1.4	0.3-1.5	0.8-1.5
			200 (120-220)	0.3-1.5	0.6-1.2	0.3-1.2	0.5-1.4	0.3-1.5	0.8-1.5
			200 (120-220)	0.3-1.5	0.6-1.2	0.3-1.2	0.5-1.4	0.3-1.5	0.8-1.5
	High-carbon steel, alloy steel	180-280	160 (80-180)	0.2-1.2	0.6-1.2	0.2-1.0	0.5-1.4	0.2-1.2	0.6-1.5
			160 (80-180)	0.2-1.2	0.6-1.2	0.2-1.0	0.5-1.4	0.2-1.2	0.6-1.5
			160 (80-180)	0.2-1.2	0.6-1.2	0.2-1.0	0.5-1.4	0.2-1.2	0.6-1.5
	Alloy tool steel	280-350	150 (80-160)	0.2-1.0	0.5-1.0	0.2-1.0	0.5-1.0	0.2-1.0	0.5-1.0
			150 (80-160)	0.2-1.0	0.5-1.0	0.2-1.0	0.5-1.0	0.2-1.0	0.5-1.0
			150 (80-160)	0.2-1.0	0.5-1.0	0.2-1.0	0.5-1.0	0.2-1.0	0.5-1.0
M	Stainless steel	<180	150 (80-190)	0.3-1.0	0.6-1.0	0.3-1.2	0.6-1.2	0.3-1.2	0.5-1.6
			150 (80-190)	0.3-1.0	0.6-1.0	0.3-1.2	0.6-1.2	0.3-1.2	0.5-1.6
			150 (80-190)	0.3-1.0	0.6-1.0	0.3-1.2	0.6-1.2	0.3-1.2	0.5-1.6
K	Cast Iron	180-250	180 (80-190)	0.3-1.0	0.5-1.2	0.2-1.0	0.5-1.4	0.2-1.2	0.8-1.6
			180 (80-190)	0.3-1.0	0.5-1.2	0.2-1.0	0.5-1.4	0.2-1.2	0.8-1.6
			180 (80-190)	0.3-1.0	0.5-1.2	0.2-1.0	0.5-1.4	0.2-1.2	0.8-1.6

Trouble shooting carbide milling

Vibrations

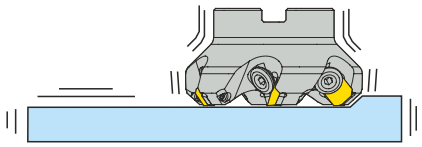	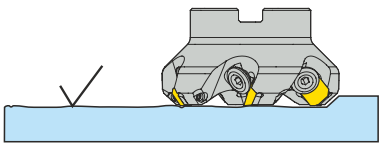
• Improve the stability of cutter and workpiece. • Change cutter positioning. • Minimize tool overhang. • Reduce the cutting speed. • Increase the feed rate. • Reduce the depth of cut. • Select a different insert geometriy, see page Insert geometry • Use Steadyline antivibration bar	• Improve the stability of cutter and workpiece. • Minimize tool overhang. • Reduce the feed rate. • Increase the cutting speed • Use coolant. • Use wiper inserts. • Keep feed/rev value within wiper width • Use Steadyline antivibration bar

Tool life problems

Rapid flank wear 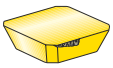	• Reduce the cutting speed. • Increase the feed rate. • Climb milling.	**Comb cracks** 	• Reduce the cutting speed. • Reduce the feed rate. • No coolant • Change cutter positioning
Rapid notch wear 	• Reduce the cutting speed. • Increase the feed rate. • Increase the depth of cut. • Climb milling. • Change cutter positioning	**Built-up edge (bue)** 	• Increase the cutting speed. • Increase the feed rate • No coolant. • Climb milling. • Change cutter positioning
Chipping 	• Increase the cutting speed. • Reduce the feed rate. • Conventional milling. • Improve chip evacuation. • Change cutter positioning. • Minimize tool overhang. • Improve stability		

Cutting data calculation

Cutting data calculation		
RPM	$n = \frac{v_c \cdot 1000}{\pi \cdot D_c}$	(rev/min) (inch/min)
Cutting speed	$v_c = \frac{n \cdot \pi \cdot D_c}{1000}$	(m/min) (ft/min)
Feed speed	$v_f = n \cdot ZEFP \cdot f_z$	(mm/min) (inch/min)
Feed per revolution	$f = ZEFP \cdot f_z$	(mm/rev) (inch/rev)
Material removal rate	$Q = \frac{a_e \cdot a_p \cdot v_f}{1000}$	(cm^3/min) ($inch^3$/min)
Cutting speed and RPM for copying	$v_c = \frac{n \cdot \pi \cdot D_w}{1000}$	(m/min) (ft/min)
	$D_w = 2 \cdot \sqrt{a_p (D_c - a_p)}$	(mm) (inch)
	$n = \frac{v_c \cdot 1000}{\pi \cdot D_w}$	(RPM)

Effective No. of teeth (ZEFP)
The effective No. of teeth (ZEFP) is used to calculate the feed speed (vf
) and the feed per revolution (f).
For most of the cutters the effective No. of teeth (ZEFP) is equal to the No. of teeth in the cutter (ZNP), but for some of the cutters ZEFP is less than ZNP

Cutting data calculation

Cutting data calculation

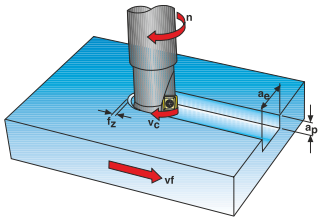

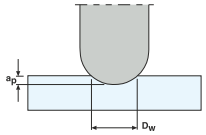

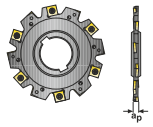

a_e	=	Width of cut mm/radial depth of cut
a_p	=	Depth of cut mm/axial depth of cut
DC	=	Cutter diameter
f	=	Feed per revolution
f_z	=	Feed per tooth
ZEFP	=	Effective No. of teeth for calculation of feed speed or feed per rev (see below)
n	=	RPM
Q	=	Material removal rate
V_c	=	Cutting speed
v_f	=	Feed speed
v_f	=	Feed speed

Cutting data calculation

Cutting data calculation

Internal circular interpolation
When using circular interpolation or helical interpolation ramping to increase the diameter of a hole in a workpiece, the stock removal depth is not the same as the width of cut value. The real width of cut must be calculated from the formula below. The width of cut value is then used for calculation of feed/tooth and feed speed.

$$a_e = \frac{D_o^2 - D_i^2}{4\,(D_o - D_c)}$$

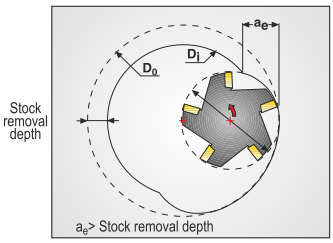

External circular interpolation
When using external circular interpolation or helical interpolation ramping to decrease the diameter of a round workpiece the stock removal depth is not the same as the width of cut value. The real width of cut must be calculated from the formula below.

The width of cut is then used for calculation of feed/tooth and feed speed.

$$a_e = \frac{D_o^2 - D_i^2}{4\,(D_i + D_c)}$$

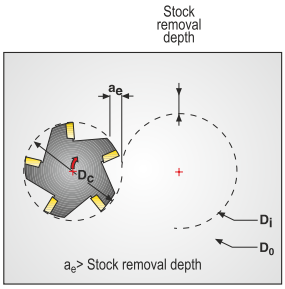

Increase the width of cut successively to full value
For circular interpolation operations it is recommended to successively increase the width of cut up to full value. When using radial infeed up to full width of cut, reduce the feed/tooth and feed speed to half.

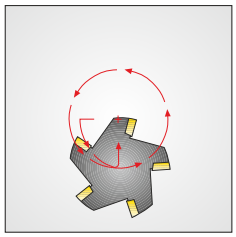

Successive increase of width of cut – recommended method.

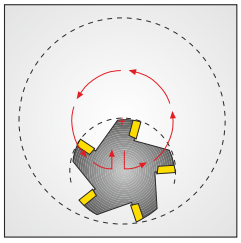

Radial infeed – Reduce feed/tooth.

Feed speed related to the centre of the cutter
When calculating feed speed and feed/tooth from average chip thickness using circular interpolation or helical interpolation ramping in an operation, the feed speed and feed/tooth are always related to the centre and not to the periphery of the cutter.

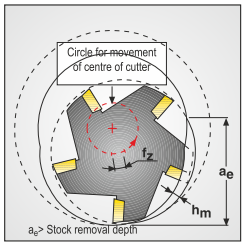

Side milling

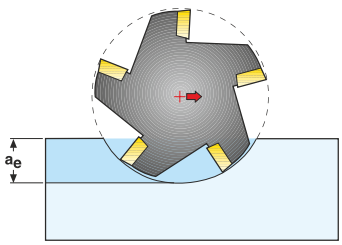

Relative engagement of the cutter diameter (ae/DC=%)
30%
20%
10%
5%
Multiply the feed per tooth by the following factor
1.25
1.5
2.0
3.0

Cutting data calculation

This table can be used for cutters with cutting edge angle = 90º

a_e/DC %	Feed Per Tooth, mm/tooth (f_z)													Speed Factor
	0,03	0,06	0,08	0,10	0,15	0,20	0,25	0,30	0,40	0,50	0,60	0,80	1,00	
	Average Chip Thickness, mm/tooth (hm)													
Width of cut up to and including DC/2														
2 (0.02)					0,02	0,03	0,04	0,04	0,06	0,07	0,08	0,11	0,14	1.8
3 (0.03)				0,02	0,03	0,03	0,04	0,05	0,07	0,09	0,10	0,14	0,17	1.7
5 (0.05)			0,02	0,02	0,03	0,04	0,06	0,07	0,09	0,11	0,13	0,18	0,22	1.6
10 (0.10)		0,02	0,02	0,03	0,05	0,06	0,08	0,09	0,12	0,16	0,19	0,25	0,31	1.5
15 (0.15)	0,011	0,02	0,03	0,04	0,06	0,08	0,09	0,11	0,15	0,19	0,23	0,30		1.4
20 (0.20)	0,013	0,03	0,03	0,04	0,06	0,09	0,11	0,13	0,17	0,22	0,26			1.35
30 (0.30)	0,016	0,03	0,04	0,05	0,08	0,10	0,13	0,16	0,21	0,26	0,31			1.3
40 (0.40)	0,018	0,04	0,05	0,06	0,09	0,12	0,15	0,18	0,23	0,29				1.25
50 (0.50)	0,02	0,04	0,05	0,06	0,10	0,13	0,16	0,19	0,25	0,32				1.2
Slotting (Width of cut = DC)														
100 (1.00)	0,02	0,04	0,05	0,06	0,10	0,13	0,16	0,19	0,25	0,32				1.0

= Feed per tooth correction example: at 20% engagement also increase speed by 1.35

When using side milling it is necessary to increase the feed per tooth to keep the chip thickness at the same value.
It is also possible to increase the cutting speed and keep the same tool life. Use the tables below.

a_e/D_c %	Feed Per Tooth, in/tooth (fz)													Speed Factor
	.0012	.0024	.0031	.004	.006	.008	.010	.012	.016	.020	.024	.031	.039	
	Average Chip Thickness, in/tooth (hm)													
Width of cut up to and including Dc/2														
2 (0.02)					.0008	.0012	.0016	.0016	.0024	.0028	.0031	.0043	.0055	1.8
3 (0.03)				.0008	.0012	.0012	.0016	.0020	.0028	.0035	.0039	.0055	.0067	1.7
5 (0.05)			.0008	.0008	.0012	.0016	.0024	.0028	.0035	.0043	.0051	.0071	.0087	1.6
10 (0.10)		.0008	.0008	.0012	.0020	.0024	.0031	.0035	.0047	.0063	.0075	.0098	.0122	1.5
15 (0.15)	.0004	.0008	.0012	.0016	.0024	.0031	.0035	.0043	.0059	.0075	.0091	.0118		1.4
20 (0.20)	.0005	.0012	.0012	.0016	.0024	.0035	.0043	.0051	.0067	.0087	.0102			1.35
30 (0.30)	.0006	.0012	.0016	.0020	.0031	.0039	.0051	.0063	.0083	.0102	.0122			1.3
40 (0.40)	.0007	.0016	.0020	.0024	.0035	.0047	.0059	.0071	.0091	.0114				1.25
50 (0.50)	.0008	.0016	.0020	.0024	.0039	.0051	.0063	.0075	.0098	.0126				1.2
Slotting (Width of cut = Dc)														
100 (1.00)	.0008	.0016	.0020	.0024	.0039	.0051	.0063	.0075	.0098	.0126				1.0

= Feed per tooth correction example: at 20% engagement also increase speed by 1.35

Instead of using the table above for calculating hm and fz, the following formula could be used if a_e/DC < 30%.

$$h_m = f_z \cdot \sqrt{\frac{a_e}{D_c}}$$

$$f_z = h_m \cdot \sqrt{\frac{D_c}{a_e}}$$

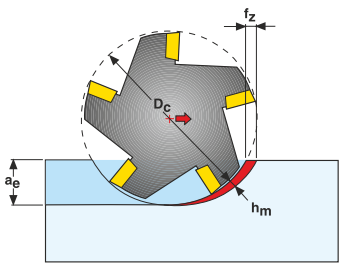

Cutting data calculation

This table can be used for cutters with cutting edge angle = 45º

a_e/DC %	Feed Per Tooth, mm/tooth (f_z)													Speed Factor
	0,03	0,06	0,08	0,10	0,15	0,20	0,25	0,30	0,40	0,50	0,60	0,80	1,00	
	Average Chip Thickness, mm/tooth (hm)													
Width of cut up to and including DC/2														
2 (0.02)					0,01	0,02	0,02	0,03	0,04	0,05	0,06	0,08	0,10	1.8
3 (0.03)				0,01	0,02	0,02	0,03	0,04	0,05	0,06	0,07	0,10	0,12	1.7
5 (0.05)			0,01	0,02	0,02	0,03	0,04	0,05	0,06	0,08	0,09	0,13	0,16	1.6
10 (0.10)		0,01	0,02	0,02	0,03	0,04	0,05	0,07	0,09	0,11	0,13	0,18	0,22	1.5
15 (0.15)	0,008	0,02	0,02	0,03	0,04	0,05	0,07	0,08	0,11	0,13	0,16	0,21		1.4
20 (0.20)	0,009	0,02	0,02	0,03	0,05	0,06	0,08	0,09	0,12	0,15	0,18			1.35
30 (0.30)	0,011	0,02	0,03	0,04	0,05	0,07	0,09	0,11	0,15	0,18	0,22			1.3
40 (0.40)	0,012	0,02	0,03	0,04	0,06	0,08	0,10	0,12	0,17	0,21				1.25
50 (0.50)	0,01	0,03	0,04	0,05	0,07	0,09	0,11	0,14	0,18	0,23				1.2
Face milling full engagement (Width of cut = DC)														
100 (1.00)	0,02	0,04	0,05	0,06	0,10	0,13	0,16	0,19	0,25	0,32				1.0

When using side milling it is necessary to increase the feed per tooth to keep the chip thickness at the same value.
It is also possible to increase the cutting speed and keep the same tool life. Use the tables below.

a_e/D_c %	Feed Per Tooth, in/tooth (f_z)													Speed Factor
	.0012	.0024	.0031	.004	.006	.008	.010	.012	.016	.020	.024	.031	.039	
	Average Chip Thickness, in/tooth (hm)													
Width of cut up to and including D_c/2														
2 (0.02)					.0004	.0008	.0008	.0012	.0016	.0020	.0024	.0031	.0039	1.8
3 (0.03)				.0004	.0008	.0008	.0012	.0016	.0020	.0024	.0028	.0039	.0047	1.7
5 (0.05)			.0004	.0008	.0008	.0012	.0016	.0020	.0024	.0031	.0035	.0051	.0063	1.6
10 (0.10)		.0004	.0008	.0008	.0012	.0016	.0020	.0028	.0035	.0043	.0051	.0071	.0087	1.5
15 (0.15)	.0003	.0008	.0008	.0012	.0016	.0020	.0028	.0031	.0043	.0051	.0063	.0083		1.4
20 (0.20)	.0004	.0008	.0008	.0012	.0020	.0024	.0031	.0035	.0047	.0059	.0071			1.35
30 (0.30)	.0004	.0008	.0012	.0016	.0020	.0028	.0035	.0043	.0059	.0071	.0087			1.3
40 (0.40)	.0005	.0008	.0012	.0016	.0024	.0031	.0039	.0047	.0067	.0083				1.25
50 (0.50)	.0004	.0012	.0016	.0020	.0028	.0035	.0043	.0055	.0071	.0091				1.2
Face milling full engagement (Width of cut = D_c)														
100 (1.00)	.0004	.0012	.0016	.0020	.0028	.0035	.0043	.0055	.0071	.0091				1.0

Instead of using the table above for calculating hm and fz, the following formula could be used if a_e/DC < 30%.

$$h_m = f_z \cdot \sqrt{\frac{a_e}{D_c}}$$

$$f_z = h_m \cdot \sqrt{\frac{D_c}{a_e}}$$

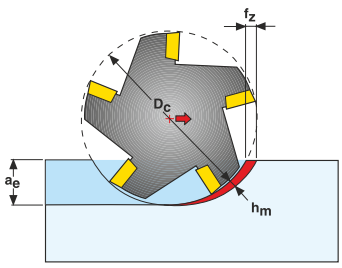

Workpiece materials

Classification, MG

MG - Introduction

Cutting speed v_c (m/min)

The foundation for MG is a classification of workpiece materials based on their type rather than their relative machinability and consequently it contains workpiece materials like composites. It is comprehensive enough, but still easy to identify which MG a particular material belongs.

Each MG has a specific material standard in a specific condition assigned as reference to allow easy adjustment of cutting data for any actual material compared to any Seco reference material see page(s) Fol

As example the reference materials EN C45E for MG P4 and EN 42 CrMo 4 for both MG P5 and MG H5 see further details in the following tables.

Steels, ferritic and martensitic stainless steels

MG	Description	Properties	Reference	$k_{c1.1}$	m_c
P1	Free-cutting steels	$360 < R_m < 880$	11 SMn30 $R_m = 385$ N/mm²	1500	0,14
P2	Low-alloy ferritic steels, C < 0.25%wt Low-alloy weldable general structural steels	$320 < R_m < 600$	S235JRG2 $R_m = 420$ N/mm²	1600	0,23
P3	Ferritic & ferritic/pearlitic steels, C < 0.25%wt Weldable general structural steels Case-hardening steels	$430 < R_m < 610$	16MnCr5 $R_m = 550$ N/mm²	1800	0,14
P4	Low-alloy general structural steels, 0.25% < C < 0.67%wt Low-alloy Quench & Temper steels	$520 < R_m < 1200$	C45E $R_m = 660$ N/mm²	2000	0,15
P5	Structural steels, 0.25% < C < 0.67%wt Quench & Temper steels	$550 < R_m < 1200$	42 CrMo 4 $R_m = 700$ N/mm²	2020	0,18
P6	Low-alloy through-hardening steels, C > 0.67%wt Low-alloy spring and bearing steels	$520 < R_m < 1200$	C100S $R_m = 600$ N/mm²	2100	0,17
P7	Through-hardening steels, C > 0.67%wt Spring and bearing steels	$600 < R_m < 1200$	100 Cr 6 $R_m = 650$ N/mm²	2160	0,17
P8	Tool steels High Speed Steels (HSS)	$600 < R_m < 1200$	X40 CrMoV51 $R_m = 700$ N/mm²	2400	0,20
P11	Ferritic & martensitic stainless steels	$415 < R_m < 1200$	X20 Cr 13 $R_m = 675$ N/mm²	2000	0,15
P12	Maraging and precipitation-hardening stainless steels	$500 < R_m < 1200$	X 5 CrNiCuNb 16 4 $R_m = 1100$ N/mm²	2100	0,17

Free-cutting, austenitic and duplex stainless steels

MG	Description	Properties	Reference	$k_{c1.1}$	m_c
M1	Free-cutting austenitic stainless steels		X 10 CrNiS 18 9	1700	0,14
M2	Low-alloy austenitic stainless steels		X 5 CrNi 18 10	1920	0,18
M3	Medium-alloy austenitic stainless steels		X 2 CrNIMo 18 14 3	2070	0,17
M4	High-alloy austenitic and duplex stainless steels		X2CrNIMoN 22 5 3	2230	0,16
M5	Difficult high-alloy austenitic and duplex stainless steels		X 2 CrNiMoN 25 7 4	2510	0,13

procarb CUTTING TOOLS

Workpiece materials

Classification, MG

Cast irons

MG	Description	Properties	Reference	$k_{c1.1}$	m_c
K1	Grey cast irons (GCI)		EN-GJL-250	930	0,32
K2	Compacted graphite irons (CGI)		EN-GJV-400	1000	0,35
K3	Malleable cast irons (MCI)		EN-GJMB-550-4	1050	0,37
K4	Nodular cast irons (SGI)		EN-GJS-500-7	1160	0,37
K5	Austempered ductile irons (ADI)		EN-GJS-1000-5		
K6	Austenitic lamellar cast irons		EN-GJLA-XNiCuCr15-6-2		
K7	Austenitic nodular cast irons		EN-GJSA-XNiMn23-4		

Non-ferrous metals

MG	Description	Properties	Reference	$k_{c1.1}$	m_c
N1	Aluminium alloys, Si < 9%		AW-7075		
N2	Aluminium alloys, 9% < Si < 16%		AC-44200 Si = 12%		
N3	Aluminium alloys, Si >16%		AlSi17Cu5		
N11	Copper alloys		CW614N	740	0,26

Superalloys and titanium

MG	Description	Properties	Reference	$k_{c1.1}$	m_c
S1	Iron-based superalloys		Discalloy		
S2	Cobalt-based superalloys		Stellite 21		
S3	Nickel-based superalloys		Inconel 718	2530	0,21
S11	Titanium, low alloyed, (a)		Ti		
S12	Titanium, medium alloyed, (a+2)		TIAl6V4		
S13	Titanium, high alloyed, (near 2 and 2)		TI10V2Fe3Al	1500	0,24

+91 44 79665707 sales@procarbtools.com www.procarbtools.in

Workpiece materials

Classification, MG

Hard materials

MG	Description	Properties	Reference	$k_{c1.1}$	m_c
H3	Case-hardened steels	58 < HRC < 62	16MnCr5 60 HRC	2070	0,14
H5	Quenched & Tempered steels	38 < HRC < 56	42 CrMo4 50 HRC	2320	0,18
H7	Quenched & Tempered steels Bearing steels	56 < HRC < 64	100 Cr6 60 HRC	2480	0,17
H8	Tool steels High Speed Steels (HSS)	38 < HRC < 64	X40 CrMoV51 50 HRC	2750	0,20
H11	Martensitic stainless steels	38 < HRC < 50	X20 Cr 13 45 HRC	2300	0,15
H12	Maraged and precipitation-hardened stainless steels	1200 <Rm< 1650	X 5 CrNICuNb 16 4 R_m = 1450 N/mm2	2410	0,17
H21	Manganese steels	23 < HRC < 64	X120 Mn 12 50 HRC		
H31	White cast irons	50 < HRC < 64	EN-GJN-HV600(XCr11) 55 HRC		

Other difficult materials

MG	Description	Properties	Reference	$k_{c1.1}$	m_c
PM1	Low-alloy PM-materials		F-0008 Fe-0.7C		
PM2	Medium-alloy PM-materials		FLC-4608 Fe2Cu1.8Ni 0.5Mo0.2Mn0.8C		
PM3	High-alloy PM-materials Exhaust valve seat materials, etc.				
HF1	Hardfacing alloys Welded or plasma-deposited iron-based alloys				
HF2	Hardfacing alloys Welded or plasma-deposited cobalt- and nickel-based alloys				
CC1	Sintered tungsten carbide		G50		

procarb CUTTING TOOLS

Workpiece materials

Classification, MG

Plastics and Composites

MG	Description	Properties	Reference	$k_{c1.1}$	m_c
TS1	Thermosetting carbon-fibre composites		Urea formaldehyde (UF)		
TS2	Thermosetting glass-fibre composites		T300 T700T800 HTA-S IMA-Epoxy (M21)...		
TS3	Thermosetting aramide-fibre composites		Epoxy - HX..(42..)/E glass (7781...)...		
TS4	Thermoplastic polymers		Kevlar 49		
TP1	Thermoplastic carbon-fibre composites		Polycarbonate (PC)		
TP2	Thermoplastic glass-fibre composites		PPS/PEEK-T300.,		
TP3	Thermoplastic aramide-fibre composites		PPS/PEEK-E-glass or A-glass...		
TP4	Thermosetting polymers				

Graphite

MG	Description	Properties	Reference	$k_{c1.1}$	m_c
GR1	Graphite		R8500		

Workpiece materials

Classification, MG

MG

MG	EN	EN-Nr	W.-Nr	DIN	AFNOR	BS	UNI	JIS	SS	UNS
	11 SMn 30	1.0715	1.0715	9 SMn 28	S250	230 M 07	CF 9 SMn 28	SUM 22	1912	G12130
	11 SMnPb 30	1.0718	1.0718	9 SMnPb 28	S 250 Pb		CF 9 SMnPb 28	SUM 22 L	1914	G12134
	10S20	1.0721	1.0721	10S20	10 F1	210 M 15	CF10S20			
			1.0722	10SPb 20	10 PbF 2		CFIOSPb 20			
P1	15 SMn 13	1.0725	1.0723	15S20		210A15		SUM 32	1922	
	35 S20	1.0726	1.0726	35S20	35 MF 4	212 M 36			1957	G11400
	46 S20	1.0727	1.0727	46S20	45 MF 4	212 M 44			1973	G11460
	11 SMn 37	1.0736	1.0736	9 SMn 36	S300	240 M 07	CF 9 SMn 36			G12150
	11 SMn 37	1.0736	1.0736	9 SMn 36	S300	240 M 07	CF 9 SMn 36			G12150
	S235JR	1.0037	1.0037	St 37-2	E24-2		Fe 360 B	STKM12C	1311	
	S235JRG2	1.0038	1.0116	St 37-3	E 24-3, E 24-4	4360-40 C	Fe 360 D FF		1312,1313	
	S275J2G3	1.0144	1.0144	St 44-3 N	E 28-3, E 28-4	4360-43 C	Fe430DFF	SM 41 C	1412,1414	
	C10	1.0301	1.0301	C10	34C10, XC10	045 M 10	C10	S10C		G10100
P2			1.0401	C15	37C12, XC18	080 M 15	C 15, C 16		1350	G10170
	C22	1.0402	1.0402	C22	C20	050 A 20	C 20, C 21		1450	G10200
	S355JR	1.0570	1.0570	St 52-3	E 36-3, E 36-4	4360-50 C	Fe 510 B	SM 50 YA	2172,2132	
	C15R	1.1141	1.1141	Ck 15	XC15, XC18	080 M 15	C 15, C 16	S15C, S15CK	1370	G10170
			1.1158	Ck25	XC25	060 A 25	C25	S25C		G10250
			1.2162	21 MnCr5	20 NC5			SCR 420 H		
	16 Mo 3	1.5415	1.5415	15 Mo 3	15D3	1501-240	16 Mo 3		2912	
			1.5423	16 Mo 5		1503-245-420	16 Mo 5	SB 450 M		G45200
	14 NiCr 14	1.5752	1.5752	14 NiCr 14	12 NC 15	655 M 13		SNC 815(H)		G33106
			1.5919	15 CrNi 6	16NC6	S107	16 CrNi 4			
	18 NiCrMo 7 6	1.6587	1.6587	18 CrNiMo 7 6	18NCD6	820 A16	18 NiCrMo 7			
P3	16MnCr5	1.7131	1.7131	16MnCr5	16MC5	527 M 17	16MnCr5	SCR 415	2511	G51170
	16 MnCrS 5	1.7139	1.7139	16 MnCrS 5						
	20MnCr5	1.7147	1.7147	20 MnCr5	20 MC5		20 MnCr5	SMnC420 (H)		G51200
	20 MnCrS 5	1.7149	1.7149	20 MnCrS 5	20 MnCrS 5			SMnC 21 H		
	13CrMo4 5	1.7335	1.7335	13CrMo44	15 CD 3.5	1501-620 Gr. 27	14CrMo4 5		2216	
			1.7337	16CrMo4 4	15 CD 4.5	1501-620 Gr. 27	14CrMo4 5		2216	
	10CrMo910	1.7380	1.7380	10CrMo910	10 CD 9.10	1501-622 Gr. 31	12CrMo910		2218	J21890
	C35		1.0501	C35	55C35	060 A 35	C35		1550	G10350
	E335	1.0503	1.0503	C45	65C45	80M46	C45	S45C	1650	G10430
	C40		1.0511	C40	60C40	080 M 40	C40	S40C		
	E360	1.0070	1.0535	St 70-2	A 70-2		Fe 690		1655	
	C60	1.0601	1.0601	C60	CC 55	080 A 62	C60			G10600
P4			1.1157	40 Mn4	35 M 5	150 M 36				G10390
	G 28 Mn6	1.1165	1.1165	30 Mn5		120 M 36		SMn 1 H, SCMn 2		G13300
	C35E	1.1181	1.1181	Ck 35	XC 38 H1	080 M 36	C35	S35C	1572	G10340
	C45E	1.1191	1.1191	Ck45	XC42	080 M 46	C45	S45C	1672	G10420
	C60E	1.1221	1.1221	Ck 60	XC60	080 A 62	C60	S58C	1665,1678	G10640
			1.1740	C60W	Y3 55			SK7		
	55 SiCr7	1.7100	1.0904	55 Si 7	55 S 7	250 A 53	55 Si 8		2085,2090	
			1.2330	35 CrMo4	34 CD 4	708 A 37	35 CrMo4		2234	T51620
			1.2542	45WCrV7		BS1	45 WCrV 8 KU		2710	T41901
		1.2714	1.2714	56NiCrMoV7		BH 224-5	56 NiCrMoV7-KU	SKT4		T61206
			1.5121	46 MnSi 4						
			1.5710	36 NiCr 6	35 NC6	640 A 35		SNC 236		
			1.5736	36 NiCr 10	35 NC 11		35 NiCr 9	SNC 631 (H)		
	36 CrNiMo 4		1.6511	36 CrNiMo 4	40 NCD 3	816 M 40	38 NiCrMo 4 (KB)			G98400
P5	34 CrNiMo 6	1.6582	1.6582	34 CrNiMo 6	35 NCD 6	817 M 40	35 NiCrMo 6 (KW)	SNCM 447	2541	G43400
	34 Or 4	1.7033	1.7033	34Cr4	32C4	530 A 32	34 Cr4(KB)	SCR 430 (H)		G51320
	41 Or 4	1.7035	1.7035	41 Cr4	42 C4	530 M 40	41 Cr4	SCR 440 (H)		G51400
	25 CrMo4	1.7218	1.7218	25 CrMo4	25 CD 4 S	708 M 25	25 CrMo4(KB)	SCM 425	2225	G41300
	42 CrMo4	1.7225	1.7225	42CrMo4	42 CD 4	708 M 40	42 CrMo4	SCM 440 (H)	2244	G41400
	42 CrMo4	1.7225	1.7225	42CrMo4	42 CD 4	708 M 40	42 CrMo4	SCM 440 (H)	2244	G41400
			1.7361	32CrMo12	30 CD 12	722 M 24	32 CrMo12		2240	
	50 CrV4	1.8159	1.8159	50 CrV4	50 CV4	735 A 50	51 CrV4	SUP 10	2230	H61500
	41 CrAlMo 7 10	1.8509	1.8509	41 CrAlMo 7	40 CAD 6.12	905 M 39	41 CrAlMo 7	SACM 645	2940	K24065
	C67S	1.1231	1.1231	Ck67	XC68	060 A 67	C70		1770	G10700
	C100S	1.1274	1.1274	Ck 101		060 A 96		SUP 4	1870	G10950
P6	C105U	1.1545	1.1545	C105W1	Y1 105		C 100 KU		1880	
			1.1645	C\105W2	Y1 105		C 100 KU	SK3		
			1.1663	C125W	Y2120		C 120 KU	SK2		

procarb CUTTING TOOLS

Workpiece materials

Classification, MG

MG

U.N.E./I.H.A.	AISI/ASTM	GOST	CSN	Misc. Brands	Condition	Structure
	1213				Annealed	
	12 L13				Annealed	
	1108				Annealed	
	11 L08				Annealed	
					Annealed	
	1140	40			Annealed	
	1146				Annealed	
	1215				Annealed	
	12 L14				Annealed	
		16D			Annealed	
	A573 Grade 58	18kp	11378		Annealed	
	A573 Grade 70	St14kP	11 448		Annealed	
	1010	10			Annealed	
F.1110	1015	15			Annealed	
	1020,1023	20	12 024		Annealed	
		17G1S	11 523		Annealed	
F.1511	1015	15			Annealed	
F.1120	1025	25			Annealed	
					Annealed	
	A204 Grade A		15 020		Annealed	
	4520				Annealed	
	3310,9314	20X2H4A	16420		Annealed	
	4320		16220		Annealed	
					Annealed	
F.1516	5115	12KHN2	14220		Annealed	
		18HG			Annealed	
	5120	20KH	14 221		Annealed	
	5120 H	20KH			Annealed	
	A182-F11, A182-F12	12KHM	15121		Annealed	
	A387 Grade 12 Cl. 2				Annealed	
F.155	A182-F22	12KH8	15313		Annealed	
F.1130	1035	35	12 040		Annealed	
F.5110	1045	45	12 050		Annealed	
	1040	40	12 041		Annealed	
F.1150	1055	55			Annealed	
	1060	60	12 061		Annealed	
	1039	40G			Annealed	
	1330	30G2			Annealed	
F.1135	1035	35			Annealed	
F.1140	1045	45	12 050		Annealed	
F.1150	1064	60			Annealed	
	1060	60			Annealed	
F.144	9255	55S2			Annealed	
F.1250	4135	35KHM			Annealed	
F.5241	S1	5KHV2S			Annealed	
	L6	5KHNV			Annealed	
	5045				Annealed	
	3135				Quenched & Tempered	
	3435				Annealed	
	9840				Quenched & Tempered	
F.1280	4340	38H2N2MA	16 343		Annealed	
	5132	35KH			Quenched & Tempered	
	5140	40H	14140		Quenched & Tempered	
F.1251	4130	20KHM	15130		Quenched & Tempered	
F.1252	4142,4140	38HM	15142		Annealed	
F.1252	4142,4140	38HM	15142		Quenched & Tempered	
					Quenched & Tempered	
F.143	6150	50KHFA	15 260		Quenched & Tempered	
F.1740	A355 Cl. A				Annealed	
F.5103	1070	70			Annealed	
F.5117	1095				Annealed	
F.5118	W1	U10A			Annealed	
		U10			Annealed	
	W1	U13			Annealed	

+91 44 79665707 sales@procarbtools.com www.procarbtools.in

Workpiece materials

Classification, MG

MG

MG	EN	EN-Nr	W.-Nr	DIN	AFNOR	BS	UNI	JIS	SS	UNS
P7	107 CrV3	1.2210	1.2210	115 CrV 3	100 C 3	Y	107 CrV 3 KU	Y	Y	T61202
			1.2510	100MnCrW4	90 MWCV 5	BO1	95 MnWCr5KU	SKS3	SKS3	T31501
	90 MnCrV8	1.2842	1.2842	90 MnCrV 8	90 MV 8	BO 2	90 MnVCr8KU			T31502
	100 Cr6	1.3505	1.3505	100 Cr6	100 C 6	534 A 99	100 Cr6	SUJ2	SUJ2	G51986
P8	X210CM2	1.2080	1.2080	X 210 CM2	Z200C12	BD3	X 210 CM3 KU	SKD1	SKD1	T30403
			1.2343	X 38 CrMoV 5 1	Z38 CDV5	BH 11	X 37 CrMoV 5 1 KU	SKD6	SKD6	T20811
	X40 CrMoV 5 1	1.2344	1.2344	X40 CrMoV 51	Z40 CDV5	BH13	X40 CrMo 51 1 KU	SKD61	SKD61	T20813
	X100 CrMoV 5	1.2363	1.2363	X100 CrMoV 51	Z100 CDV5	BA 2	X100 CrMoV 51 KU	SKD12	SKD12	T30102
			1.2365	X 32 CrMoV 3 3	32 DCV28	BH10	30 CrMoV 12 27 KU	SKD7	SKD7	T20810
			1.2436	X210CrW12			X215CrW121 KU	SKD2	SKD2	
			1.2601	X165 CrMoV 12			X165 CrMoW12KU			
			1.2713	55NiCrMoV6	55 NCDV 7			SKT4	SKT4	T61206
	HS 6-5-2-5	1.3243	1.3243	S 6-5-2-5	Z85 WDKCV 06-05-05-04-02		HS 6-5-2-5	SKH 55	SKH 55	
	HS 2-10-1-8	1.3247	1.3247	S 2-10-1-8	Z 110 DKCWV 09-08-04	BM 42	HS 2-9-1-8	SKH 51	SKH 51	T11342
	HS 18-1-2-5	1.3255	1.3255	S 18-1-2-5	Z80 WKCV 18-05-04-01	BT4	HS 18-1-1-5	SKH 3	SKH 3	T12004
	HS 6-5-2	1.3343	1.3343	S 6-5-2	Z 85 WDCV 06-05-04-02	BM2	HS 6-5-2	SKH 9, SKH 51	SKH 9, SKH 51	T11302
	HS 2-9-2	1.3348	1.3348	S 2-9-2	Z 100 DCWV 09-04-02-02		HS 2-9-2	SKH 58	SKH 58	T11307
	HS 18-0-1	1.3355	1.3355	S 18-0-1	Z80 WCV 18-04-01	BT1	HS 18-0-1	SKH 2	SKH 2	T12001
P11	X 6 Cr 13	1.4000	1.4000	X 6 Cr 13	Z6C12	403 S 17	X 6 Cr 13	SUS 403	SUS 403	S41008
	X12 CM3	1.4006	1.4006	X10 CM3	Z 10 C 13	410 S 21	X12 CM3	SUS 410	SUS 410	S41000
	X6Cr17	1.4016	1.4016	X6CM7	Z8C17	430 S 15	X8Cr17	SUS 430	SUS 430	S43000
	X20 Cr 13	1.4021	1.4021	X20 Cr 13	Z20C13	420 S 37	X20 Cr 13	SUS 420 J 1	SUS 420 J 1	S42000
	X39 Cr 13	1.4031	1.4031	X40 Cr 13	Z40C14	420 S 45	X40 Cr 14	SUS 420	SUS 420	S40280
	X70 CrMo 15	1.4109	1.4109	X65 CrMo 14	Z70D14			SUS 440 A	SUS 440 A	S44002
	X90 CrMoV 18	1.4112	1.4112	X90 CrMoV 18	Z2CND1805	409 S 19	X CrTi 12	SUS 440 B	SUS 440 B	S44003
	X105 CrMo 17	1.4125	1.4125	X105 CrMo 17	Z100 CD 17		X105 CrMo 17	SUS 440 C	SUS 440 C	S44004
	X 3 CrNiMo 13 3	1.4313	1.4313	X 5 CrNi 134	Z5CN13.4	425 C 11	X 6 CrNi 13 04	SCS5	SCS5	S41500
	X18CrN28	1.4749	1.4749	X18CrN 28	Z18C25					S44600
P12	X 6 NiCrTiMoV25 15	1.4534	1.4534	X 3 CrNiMoAl 13 8 2						S13800
	X 4 CrNiCuNb 164	1.4540	1.4540	X 4 CrNiCuNb 16 4						S15500
		1.4540	1.4540	X 4 CrNiCuNb 16 4	Z4CNUNb16.4M					S15500
	X4 CrNiCuNb 164	1.4540	1.4540	X 4 CrNiCuNb 16 4						S15500
	X 5 CrNiCuNb 16 4	1.4542	1.4542	X 5 CrNiCuNb 16 4				SUS 630	SUS 630	S17400
	X 5 CrNiCuNb 17 4	1.4548	1.4542	X 5 CrNiCuNb 17 4	Z6CNU17.4			SCS 24, SUS 630	SCS 24, SUS 630	S17400
	X 7 CrNiAl 17 7	1.4564	1.4564	X 7 CrNiAl 17 7	Z 9 CAN 17.7	301 S 81	X 7 CrNiAl 17 7	SUS 631	SUS 631	S17700
	X 2 NiCoMoTi 18 12 4	1.6356	1.6356	X 2 NiCoMoTi 18 12 4						K93160
	X 2 NiCoMoTi 189 5	1.6358	1.6358	X 2 NiCoMoTi 18 9 5	Z2NKD 19-09					K93120
	X2NiCoMo18 9 5	1.6358	1.6358	X 2 NiCoMoTi 18 9 5	Z2NKD 19-09					K93120
	X2NiCoMo18 8 5	1.6359	1.6359	X2NiCoMo18 8 5		S162				K92890
	X2NiCoMo18 8 5	1.6359	1.6359	X2NiCoMo18 8 5		S162				K92890
	X 10 CrNiS 18 9	1.4305	1.4305	X 10 CrNiS 18 9	Z 10 CNF 18.09	303 S 31	X 10 CrNi 18 09	SUS 303	SUS 303	S30300
M1	X 2 CrNi 19 11	1.4306	1.4306	X 2 CrNi 19 11	Z2CN18.10	304 S 12	X 3 Cr Ni 18 11	SUS 304 L	SUS 304 L	S30403
M2	X5 CrNi 18 10	1.4301	1.4301	X 5 CrNi 18 10	Z6CN18.09	304 S 31	X 5 CrNi 18 11	SUS 304	SUS 304	S30400
	X5CrNiMo 17 12 2	1.4401	1.4401	X 5 CrNiMo 17 12 2	Z3CND 17.11.1	316 S 31	X 5 CrNiMo 17 12	SUS 316	SUS 316	S31600
	X 6 CrNiNb 18 10	1.4550	1.4550	X 6 CrNiNb 18 10	Z6CNNb18.10	347 S 31	X 6 CrNiNb 18 11	SUS 347	SUS 347	S34700
	X 9 CrNi 18 8	1.4310	1.4310	X 12 CrNi 17 7	Z 12 CN 17.07	301 S 21	X 12 CrNi 17 07	SUS 301	SUS 301	S30100
	X12 CrNi 18 8	1.4300	1.4300	X 12 CrNi 18 8	Z 12 CN 18	302 S 25		SUS 302	SUS 302	S30200
M3	X2CrNiMo 18 14 3	1.4435	1.4435	X 2 CrNiMo 18 14 3	Z2CND 17.13	316 S 12	X 2 CrNiMo 17 13 2	SCS 16, SUS 316 L	SCS 16, SUS 316 L	S31603
	X2CrNiMoN 17 13 3	1.4429	1.4429	X 2 CrNiMoN 17 13 3	Z2CND17.13AZ	316 S 62	X 2 CrNiMoN 17 13 3	SUS 316 LN	SUS 316 LN	S31653
	X2 CrNiN 1810	1.4311	1.4311	X 2 CrNiN 19 11	Z2CN18.10AZ	304 S 62	X 2 CrNiN 18 11	SUS 304 LN	SUS 304 LN	S30453
	X 3 CrNiMo 1812 3	1.4466	1.4466	X 5 CrNi 1815		317 S 16	X 5 CrNi 18 15	SUS 317	SUS 317	S31700
	X 9 CrNiSiNCe 21 112	1.4835	1.4893	X 9 CrNiSiNCe 2111 2		310 S 31				S30815
	X12 CrNi 25 21	1.4335	1.4335	X12 CrNi 25 21	Z12CN 25.20	310 S 24	X 6 CrNi 26 20	SUH 310, SUS 310 S	SUH 310, SUH 310 S	S31008
M4	X 2 CrNiMoN 22 5 3	1.4462	1.4462	X 2 CrNiMoN 22 5	Z 2 CND 22.05 Az	332 S 15	X 2 CrNiMoN 22 5			S31803
	X2 CrNiMoSi 19 5	1.4424	1.4417	X 2 CrNiMoSi 19 5	Z 2 CND 18.05.03					S31500
	X2NiCrMoCu 25 20 5	1.4539	1.4539	X2NiCrMoCu 2520 5	Z2NCDU 2520	904 S 13				N08904
	X 3 CrNiMo 27 5 2	1.4460	1.4460	X 4 CrNiMo 27 5 2	Z 3 CND 25.7 Az		X 3 CrNiMo 27 5 2	SUS 329 J 1	SUS 329 J 1	S32900
	X 5 CrNiCuNb 16 4	1.4980	1.4943	X4 NiCrTi 2515	Z6NCTDV25.15	HR 51		SUH 660	SUH 660	S66286
M5	X1 CrNiMoN 20 18 7	1.4547	1.4529	X1 CrNiMoN 2018 7	Z1 CNDU 20.18.05 Az		X1 CrNiMoN 2018 7			S31254
	X 1 CrNiMoN 25 22 8	1.4652	1.4652	X 2 CrNiMoN 2522 7						S32654
	X 10 NiCrAlTi 32 20	1.4876	1.4876	X 10 NiCrAlTi 32 20	Z 10 NC 32.21			NCF 800	NCF 800	N08800
	X 2 CrNiMoN 25 7 4	1.4410	1.4410	X 2 CrNiMoN 25 7 4	Z 3 CND 25.07 Az		X 2 CrNiMoN 25 7 4			S32750

procarb CUTTING TOOLS

Workpiece materials

Classification, MG

MG

MG	EN	EN-Nr	W.-Nr	DIN	AFNOR	BS	UNI	JIS	SS	UNS
K1	EN-GJL-150	0,6150	0.6150	GG-15	Ft 15 D	Grade 150	G15	FC 150	01 15-00	F11601
	EN-GJL-200	0.6200	0.6200	GG-20	Ft20 D	Grade 220	G20	FC 200	01 20-00	F12101
	EN-GJL-250	0.6250	0.6250	GG-25	Ft25D	Grade 260	G25	FC 250	01 25-00	F12401
	EN-GJL-350	0.6350	0.6350	GG-35	Ft 35 D	Grade 350	G35	FC 350	01 35-00	F13502
	EN-GJL-215			GG-220 HB					0219	
K2	EN-GJV-300			GJV-300						
	EN-GJV-350			GJV-350						
	EN-GJV-400			GJV-400						
	EN-GJV-450			GJV-450						
	EN-GJV-500			GJV-500						
K3	EN-GJMB-550-4	0.8155		GTS-55-04	P 540/5	P 540/5	P 55-04	PCMP55-04	08 54-00	F24130
K4	EN-GJS-350-22	0.7033	0.7033	GGG-35.3	FGS 370-17	Grade 350/22		FCD 350-22L	07 17-15	
	EN-GJS-400-15	0.7040	0.7040	GGG-40	FGS 400-12	Grade 420/12	GS 400-12	FCD 400-18L	07 17-02	F32800
	EN-GJS-400-18	0.7043	0.7043	GGG-40.3	FGS 370-17	Grade 370/17	GSO42/17		07 17-12	F32800
	EN-GJS-500-7	0.7050	0.7050	GGG-50	FGS 500-7	Grade 500/7	GS 500-7	FCD 500-7	0727-02	F33800
	EN-GJS-600-3	0.7060	0.7060	GGG-60	FGS 600-3	Grade 600/3	GS 600-3	FCD 600-3	07 32-03	F34100
	EN-GJS-700-2	0.7070	0.7070	GGG-70	FGS 700-2	Grade 700/2	GS 700-2	FCD 700-2	07 37-01	F34800
K5										ADI grade 5
	EN-GJS-1000-5			GJS-1000-5						ADI grade 2
	EN-GJS-1200-2			GJS-1200-2						ADI grade 3
	EN-GJS-1400-1			GJS-1400-1						ADI grade 4
	EN-GJS-800-8			GJS-800-8						ADI grade 1
K6	EN-GJLA-XNiCr 20-2	0.6660	0.6660	GGL-NiCr20 2	FGL Ni20 Cr2	Grade F2			0523-00	F41002
	EN-GJLA-XNiCr 30-3	0.6676	0.6676	GGL-NiCr30 3	FGL Ni30 Cr3	Grade F3				F41004
	EN-GJLA-XNiCuCr 15-6-2	0.6655	0.6655	GGL-NiCuCr 15 6 2	FGLNi15Cu6 Cr2	Grade F1				F41000
K7	EN-GJSA-XNiMn 13-7	0.7652	0.7652	GGG-NiMn13 7	FGSNi13Mn7	Grade S6			07 72-00	
	EN-GJSA-XNiCr 20-2	0.7660	0.7660	GGG-NiCr20 2	FGS Ni20 Cr2	Grade S2				F43000
	EN-GJSA-XNiMn 23-4	0.7673	0.7673	GGG-NiMn 234	FGS Ni23 Mn4	Grade S2M				F43010
	EN-GJSA-XNiCr 30-3	0.7676	0.7676	GGG-NiCr30 3	FGS Ni30 Cr3	Grade S3				F43003
	EN-GJSA-XNi 35	0.7683	0.7683	GGG-Ni 35	FGS Ni35					F43006
N1	AW-1050A	Al99.5	3.0255	Al99.5	A-5/1050A	1B		(A1050)	4007	AA1050A
	AW-2011	AlCuBiPb	3.1655	AlCuBiPb	A-U5PbBi/2011	FC1		A2011	4355	AA2011
	AW-2014	AlCuSiMn	3.1255	AlCuSiMn	A-U4SG/2014	H15			4338	AA2014
	AW-5005	AlMgI	3.3315	AlMgI	A-G0.6	N41			4106	AA5005
	AW-6060	AlMgSi0.5	3.3206	AlMgSi0.5	A-GS/6060	(HO)			4103	AA6060
	AW-6063	AlMgSi0.7	3.3210	AlMgSi0.7	A-GSUC/6061	(H10)		(A6063)	4104,4107	AA6005
	AW-3103	AlMnI	3.0515	AlMnI		N3			4054	AA3103
	AW-3003	AlMnICu	3.0517	AlMnICu	A-M1/3003			A3003		AA3003
	AW-7020	AlZn4.5Mg1	3.4335	AlZn4.5Mg1	A-Z5G/7020	H17			4425	AA7020
	AW-7075		3.4365	AlZnMgCu1.5	A-Z5GU/7075	2L95/2L96		A7075		AA7075
	AC-42000		3.2341	G-AlSi5Mg	A-S7G	LM25	3599	AC4C	4244	
	AC-46200	AlSi8Cu3(Si)	3.2161	G-AlSi8Cu3					4251	A13800
	MG-P-63	MgAl6Zn	3.5612	G-MgAl6Zn	G-A6-Z1	MAG-E-121				M11600
	MG-P-61	MgAl8Zn	3.5812	G-MgAl8Zn	(G-A7-Z1)					
	MN65120	MgSe3Zn2Zr1	3.5103	G-MgSe3Zn2Zr1	ZRE1	MAG6-TE				M12330
N2	AC-43400	AlSi10Mg(Fe)	3.2381	G-AlSi10Mg	A-S10G	LM9			4253	A13600
	AC-44200	AlSI12	3.2382	GD-AlSi12						
	AW-6082	AlMgSil	3.2315	AlMgSil	A-SGM0.7/6082	H30			4212	AA6082
N3		AlSi17Cu5						ADC14		
N11	CC331G		2.0940.01	CuAHOFe	CuAHOFe	AB1			5710	C95200
	CC333G		2.0975.01	CuAHONi	CuAl10Ni5Fe5	AB2			5716	C95500
		CuNi10Fe1Mn	2.0872	CuNi10Fe1Mn	CuNi10Fe1Mn	CN102			5667	C70600
				CuNi10Zn45						
		CW408J	2.0790	CuNi18Zn19Pb	CuNi18Zn19Pb1					C76300
	CW352H		2.1176	CuPbIOSn	CuSn10Pb10	LB2			5640	C93700
	CC480K		2.1050.01	CuSnIO	CuSnIO	CT1			5443	C90700
			2.1087	CuSnIOZn					5458	C90500
	CW452K	CuSn6	2.1020	CuSn6	CuSn6	PB103		C5191	5428	C51900
	CW502L	CuZn15	2.0240	CuZn15	CuZn15	CZ102		C2300	5112	C23000
	CW706R	CuZn28Sn1	2.0470	CuZn28Sn1	CuZn29Sn1				5220	C44300
	CW508L	CuZn37	2.0321	CuZn37	CuZn37	CZ108			5150	C27200
	CW717R	CuZn38Sn1	2.0530	CuZn38Sn1						C46400
	CW614N	CuZn39Pb3	2.0401	CuZn39Pb3	CuZn39Pb3	CZ121			5170	C38500
	CW612N	CuZn40Pb2	2.0402	CuZn40Pb2	CuZn39Pb2	CZ120			5168	C37800
	CW622N	CuZn44Pb2	2.0410	CuZn44Pb2		CZ104			5272	C68700

Workpiece materials

Classification, MG

MG

U.N.E./I.H.A.	AISI/ASTM	GOST	CSN	Misc. Brands	Condition	Structure
	A48 25 B	Sc 15	422 415			Grey cast iron (GCI)
	A48 30 B	Sc 20	422 420			Grey cast iron (GCI)
	A48 35 B	Sc 25	422 425			Grey cast iron (GCI)
	A48 50 B	Sc 35				Grey cast iron (GCI)
	G3500					Grey cast iron (GCI)
	Grade 350					Compacted graphite iron (CGI)
	Grade 400					Compacted graphite iron (CGI)
	Grade 400-15					Compacted graphite iron (CGI)
	Grade 450					Compacted graphite iron (CGI)
	Grade 500					Compacted graphite iron (CGI)
	A220 60004				Tempered	Malleable cast iron (MCI)
						Nodular cast iron (SGI)
FGE 38-17	60-40-18	Vc 42-12	422 304			Nodular cast iron (SGI)
	60-40-18	Vc 42-12				Nodular cast iron (SGI)
FGE 50-7	A536,80-55-06	Vc50-2	422 305			Nodular cast iron (SGI)
FGE 60-2	A476,80-60-03	Vc60-2	422 306			Nodular cast iron (SGI)
FGE 70-2	A536,100-70-03	Vc70-2				Nodular cast iron (SGI)
	1600/1300/-					Austempered ductile iron (ADI)
	1050/700/7					Austempered ductile iron (ADI)
	1200/850/4					Austempered ductile iron (ADI)
	1400/1100/1					Austempered ductile iron (ADI)
	850/550/10					Austempered ductile iron (ADI)
	A436 Type 2			Ni-Resist 2		Austenitic lamellar cast iron
	A436 Type 3			Ni-Resist 3		Austenitic lamellar cast iron
	A436 Type 1			Ni-Resist 1		Austenitic lamellar cast iron
				Nodumag		Austenitic nodular cast iron
	A436Type D-2			Ni-Resist D-2		Austenitic nodular cast iron
	A439Type D-2M			Ni-Resist D-2M		Austenitic nodular cast iron
	A436Type D-3			Ni-Resist D-3		Austenitic nodular cast iron
	A439Type D-5			Ni-Resist D-5		Austenitic nodular cast iron
	B26					
	A380					
	AZ61A					
	AZ80A					
	AMS 4442					
	B85					
	A413.2					
	B390.0					
	CA952	BrW9ZH3L				
	CA955	BrW10ZH4N4L				
	CA937					
		BrOF6.5-0.15				
		L90				
		LGMsh70-1-0.05				
		LO60-1				
		LWMsh77-2-0.05				

procarb CUTTING TOOLS

Workpiece materials

Classification, MG

MG

MG	EN	EN-Nr	W.-Nr	DIN	AFNOR	BS	UNI	JIS	SS	UNS
S1										
S2										
S3	NiMo30	2.4810	2.4810							N10002
	NiMo16Cr15W	2.4819	2.4819							N10276
	NiCr19Fe19Nb5Mo3	2.4668	2.4668							N07718
		2.4669	2.4669							N07750
	NiCr20TIAl	2.4631	2.4631							N07080
	NiCr19Co18Mo4Ti3Al3									N07500
	NiCr20Co13Mo4Ti3Al	2.4654	2.4654							N07001
S11		3.7024	3.7024							
										R54620
S12										R56320
	TiAl6V4	3.7164	3.7164							R56400
S13				TiV10Fe2Al3						
H3	16MnCr5	1.7131	1.7131	16MnCr5	16MC5	527 M 17	16MnCr5	SCR 415	2511	G51170
H5	C67S	1.1231	1.1231	Ck67	XC68	060 A 67	C70		1770	G10700
	C75S	1.1248	1.1248	Ck75	XC75	060 A 78	C75		1774,1778	G10780
	C100S	1.1274	1.1274	Ck 101		060 A 96		SUP 4	1870	G10950
	C105U	1.1545	1.1545	C105W1	Y1 105		C 100 KU		1880	
		1.2550	1.2550	60WCrV7	55 WC 20		55WCrV8KU			
	55 Cr3	1.7176	1.7176	55 Cr3	55C3	527 A 60	55 Cr3	SUP 9 (A)	2253	G51550
	42 CrMo 4	1.7225	1.7225	42 CrMo 4	42 CD 4	708 M 40	42 CrMo 4	SCM 440 (H)	2244	G41400
H7	107 CrV3	1.2210	1.2210	115 CrV 3	100C 3		107 CrV 3 KU			T61202
		1.2510	1.2510	100 MnCrW4	90 MWCV 5	BO1	95 MnWCr5KU	SKS3	2140	T31501
	90 MnCrV8	1.2842	1.2842	90 MnCrV8	90 MV 8	BO 2	90 MnVCr8KU			T31502
	100 Cr6	1.3505	1.3505	100 Cr6	100 C 6	534 A 99	100 Cr6	SUJ2	2258	G51986
H8	X40 CrMoV 51	1.2344	1.2344	X40 CrMoV 51	Z40 CDV5	BH13	X 40 CrMo 51 1 KU	SKD61	2242	T20813
	X100 CrMoV 5	1.2363	1.2363	X100 CrMoV 51	Z100 CDV5	BA 2	X100 CrMoV 51 KU	SKD12	2260	T30102
	X155 CrVMo 121	1.2379	1.2379	X155 CrVMo 12 1	Z160 CDV12	BD2	X155 CrVMo 121 KU	SKD11		T30402
		1.2436	1.2436	X210CrW12			X215CrW121 KU	SKD2	2312	
		1.2601	1.2601	X165 CrMoV 12			X165 CrMoW12KU		2310	
		1.2713	1.2713	55 NiCrMoV6	55 NCDV 7			SKT4		T61206
	HS 6-5-2-5	1.3243	1.3243	S 6-5-2-5	Z85 WDKCV 06-05-05-04-02		HS 6-5-2-5	SKH 55	2723	
	HS 2-10-1-8	1.3247	1.3247	S 2-10-1-8	Z 110 DKCWV 09-08-	BM 42	HS 2-9-1-8	SKH 51		T11342
	HS 18-0-1	1.3355	1.3355	S 18-0-1	Z80 WCV 18-04-01	BT1	HS 18-0-1	SKH 2		T12001
H11	X20 Cr 13	1.4021	1.4021	X20 Cr 13	Z20C13	420 S 37	X20 Cr 13	SUS 420 J 1	2303	S42000
	X70 CrMo 15	1.4109	1.4109	X 65 CrMo 14	Z70D14			SUS 440 A		S44002
	X90 CrMoV 18	1.4112	1.4112	X90 CrMoV 18	Z2CND18 05	409 S 19	XCrTi 12	SUS 440 B	2327	S44003
	X105 CrMo 17	1.4125	1.4125	X105 CrMo 17	Z100 CD 17		X105 CrMo 17	SUS 440 C		S44004
H12	X4 CrNiCuNb 16 4	1.4540	1.4540	X 4 CrNiCuNb 16 4						S15500
	X 5 CrNiCuNb 16 4	1.4542	1.4542	X 5 CrNiCuNb 16 4				SUS 630		S17400
	X 5 CrNiCuNb 16 4	1.4542	1.4542	X 5 CrNiCuNb 16 4				SUS 630		S17400
	X 7 CrNiAl 17 7	1.4568	1.4568	X 7 CrNiAl 17 7	Z 9 CAN 17.7	301 S 81	X 7 CrNiAl 17 7	SUS 631	2388	S17700
	X 8 CrNiMoAl 15 7 5	1.4574	1.4574	X 8 CrNiMoAl 15 7 5						S15700
	X 6 NiCrTiMoV25 15	1.4943	1.4943	X4 NiCrTi 25 15	Z6NCTDV25.15	HR 51		SUH 660	2570	S66286
	X2NiCoMo18 8 5	1.6359	1.6359	X2NiCoMo18 8 5		S162				K92890
	X 2 NiCoMoTi 18 9 5	1.6358	1.6358	X 2 NiCoMoTi 18 9 5	Z2NKD19-09					K93120
	X 2 NiCoMoTi 18 9 5	1.6358	1.6358	X 2 NiCoMoTi 18 9 5	Z2NKD 19-09					K93120
	X 2 NiCoMoTi 18 12 4	1.6356	1.6356	X 2 NiCoMoTi 18 12 4						K93160
H21	X120Mn12	1.3401	1.3401	X120 Mn12	Z120 M 12	BW10		SC MnH 1	2183	
H31	EN-GJN-HV520	0.9620	0.9620	G-X330 NiCr4 2	FB Ni4 Cr2 BC	Grade 2 A			05 12-00	F45001
	EN-GJN-HV550	0.9625	0.9625	G-X260 NiCr4 2	FB Ni4 Cr2 HC	Grade 2 B			05 13-00	F45000
	EN-GJN-HV600(XCr11)	0.9630	0.9630	G-X300 CrNiSi 9 5 2	FB Cr9 Ni5	Grade 2 C, D, E			04 57-00	F45003

Workpiece materials

Classification, MG

MG

U.N.E./I.H.A.	AISI/ASTM	GOST	CSN	Misc. Brands	Condition	Structure
				Discalloy	Precipitation hardened	
				Haynes 25		
				Stellite 21		
				Hastelloy C		
		KHN65MV		Hastelloy C-276		
				IN 100		
				Inconel 718		
				Inconel X-750	Solution annealed	
				Nimonic 80A		
				Rene 41		
				Udimet 500		
				Waspalloy		
				Ti	Commercially pure	Ti(«)
	AMS 4919			Ti 6-2-4-2	Annealed	Ti («)
	AMS 4943			Ti 3Al-2.5V (grd 9)	Annealed	Ti (a+ 2)
	AMS 4920, Grade 5	VT6		Ti 6Al-4V	Annealed	Ti (a+ 2)
	AMS 4986			Ti 10V-2Fe-3Al	Annealed	Ti(2)
F.1516	5115	12KHN2	14 220		Case hardened	
F.5103	1070	70			Quenched & Tempered	
F.5107	1078,1080	75			Quenched & Tempered	
F.5117	1095				Quenched & Tempered	
F.5118	W1	U10A			Quenched & Tempered	
	S1	5KHV2SF			Quenched & Tempered	
	5155				Quenched & Tempered	
F.1252	4142,4140	38HM	15142		Quenched & Tempered	
F.520L	L2	11KHF			Quenched & Tempered	
F.5220	01	9KHVG			Quenched & Tempered	
	02	9G2F			Quenched & Tempered	
F.5230	52100	SHKH15	14109		Quenched & Tempered	
F.5318	H13	4KH5MF1S			Quenched & Tempered	
F.5227	A2	9KH5VF			Quenched & Tempered	
F.5211	D2	KH12MF			Quenched & Tempered	
F.5213		KH12			Quenched & Tempered	
		KH12MF			Quenched & Tempered	
F.520.S	L6	5KHNM			Quenched & Tempered	
F.5613	M35	R6M5K5			Quenched & Tempered	
	M42	R2AM9K5			Quenched & Tempered	
	T1	R18			Quenched & Tempered	
F.5261	420	20KH13	17 022		Quenched & Tempered	Martensitic
	440 A				Quenched & Tempered	Martensitic
	440 B	95KH18			Quenched & Tempered	Martensitic
	440 C	95KH18			Quenched & Tempered	Martensitic
	XM-12			15-5 PH	H900	Martensitic
	SAE 630			17-4 PH	H1025	Martensitic
	SAE 630			17-4 PH	H900	Martensitic
	AMS 5528	09KH17N7YU1		17-7 PH	TH1050	Martensitic
	632			PH 15-7 Mo	TH1050	Martensitic
	660			A286	Precipitation hardened	Austenitic
	AMS 6512			Marage 250	Precipitation hardened	Martensitic
	AMS 6521			Marage 300	Precipitation hardened	Martensitic
	AMS 6521			Marage 300	Precipitation hardened	Martensitic
	AMS 6515			Marage 350	Precipitation hardened	Martensitic
	A128 Grade A			Hadfield		
	A532 IB (NiCr-LC			Ni-Hard 2		White cast iron
	A532 IA(NiCr-HC)			Ni-Hard 1		White cast iron
	A532 ID (Ni-HiCr)			Ni-Hard 4		White cast iron

NOTES

+91 44 79665707 sales@procarbtools.com www.procarbtools.in

NOTES

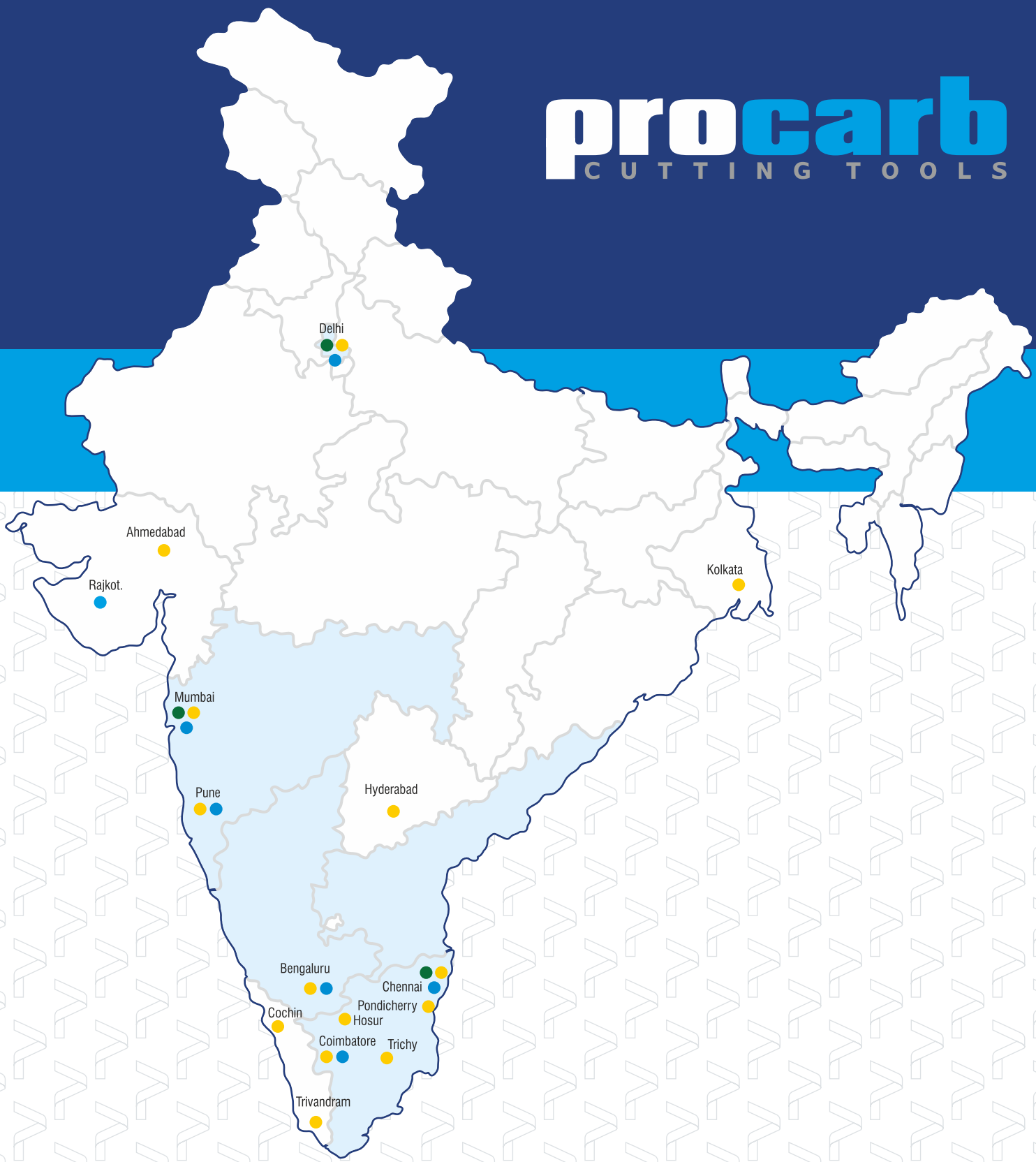

- Regional Offices
- Channel Partners
- Residential Engineers

Procarb Tools India Private Limited

#409, F1, Sivaprakasam Nagar Main Road,
Ambattur - Puzhal Main Road, Surapet,
Chennai - 600066. Tamilnadu, India.

Ph. +91 44 - 79665707
e-mail : sales@procarbtools.com

www.procarbtools.in